ORDER NO. VRD-8206-099

Service Manual

Portable Video Cassette Recorder

Panasonic VHS

NV-100

Electronic Tuner/Timer Unit

NV-V10

AC Adaptor

NV-B11

Wired Remote Controller

NV-A13

Wireless Remote Controller

NV-A17

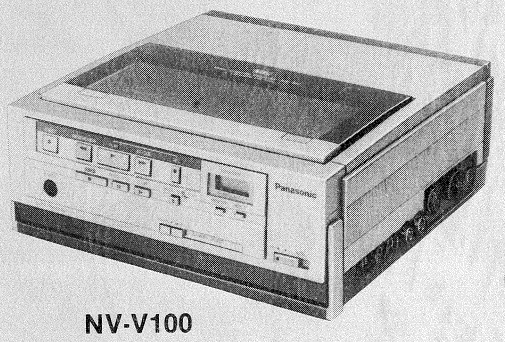

NV-V100

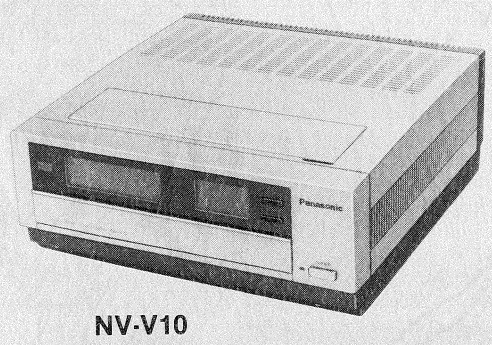

NV-V10

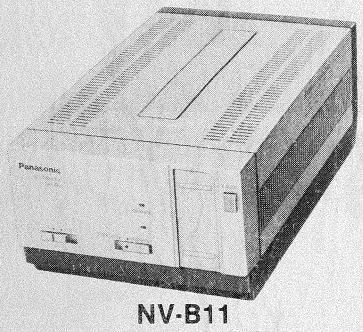

NV-B11

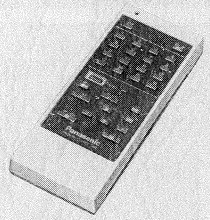

NV-A17

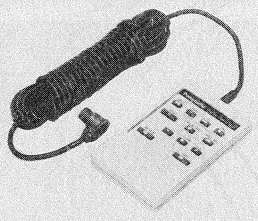

NV-A13

NV-100 Portable Deck

Vol. 1	Vol. 2	Vol. 3	Vol. 4
Summary *Operating Instructions*	*Mechanical Adjustment Procedures* *Electrical Adjustment Procedures*	*Block Diagrams* *Schematic Diagrams*	*Exploded Views* *Replacement Parts List*

Vol. 5	**NV-V10**	Electronic Tuner/Timer Unit
Vol. 6	**NV-B11**	AC Adaptor
Vol. 7	**NV-A13**	Wired Remote Controller
Vol. 8	**NV-A17**	Wireless Remote Controller

V ~~295~~ 274.

VHS

Panasonic

Matsushita Electric Trading Co., Ltd.
P.O. Box 288, Central Osaka Japan

ORDER NO. VRD-8206-099

Service Manual

Portable Video Cassette Recorder

Vol. 1

Panasonic VHS

NV-100 -E -B -EG

Summary Operating Instructions

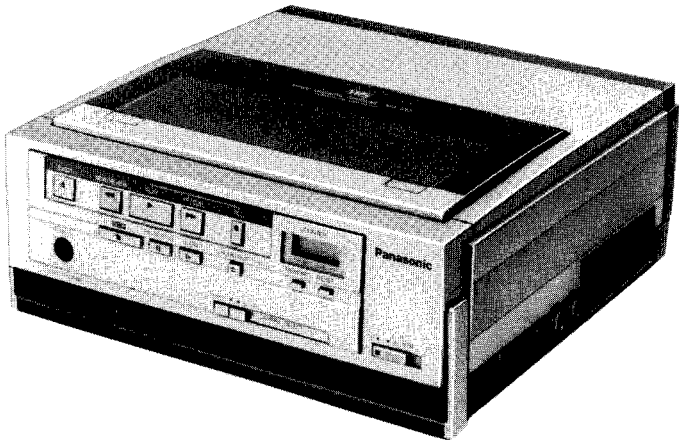

SPECIFICATIONS

Power Source:	DC 12V
Power Consumption:	Approx. 6.7W at Play mode
Video Recording System:	2 rotary heads, helical scanning system
Tape Speed:	23.39mm/s
Tape Format:	Tape width 12.7mm high density tape
Record/Playback Time:	240 min. with NV-E240
FF/REW Time:	Less than 6.5 min. with NV-E180
VIDEO	
Television System:	CCIR: 625 lines, 50 fields PAL colour signal (PAL/D.D.R SECAM colour signal: NV-100EG only)
Modulation System:	Luminance: FM azimuth recording Colour signal: converted subcarrier phase shift recording
Input Level:	VIDEO IN (BNC): 1.0Vp-p, 75Ω unbalanced
Output Level:	VIDEO OUT (BNC): 1.0Vp-p, 75Ω unbalanced RF Modulated: UHF channel 36 (±4), 75Ω unbananced
AUDIO	
Input Level:	MIC IN (M3): −70dB, more than 600Ω unbalanced 10 pin input, Multi input: −20dB, 2.2kΩ unbalanced
Output Level:	LINE OUT (RCA): −6dB, 600Ω unbalanced Earphone: −10dB, 200Ω unbalanced
Audio Track:	1 track
Video Horizontal Resolution:	Colour: more than 240 lines
Signal-to-Noise Ratio:	Video: more than 40dB Audio: more than 43dB
Audio Frequency Response:	80Hz—10kHz
Operating Room Temperature:	0°C—40°C
Operating Humidity:	35%—80%
Weight:	3.8kg (with internal battery pack)
Dimensions:	236(W)×92(H)×242(D)mm
Standard Accessories:	1 pc. Video Cassette Tape 2 pcs. DIN-RF coaxial cable 1 pc. Audio Input Attenuator 1 pc. Earphone 1 pc. Carrying Case
Optional Accessories:	Video cassette tape: NV-E240 Approx. 344m, 240 min. NV-E180 Approx. 258m, 180 min. NV-E120 Approx. 174m, 120 min. NV-E90 Approx. 130m, 90 min. NV-E60 Approx. 88m, 60 min. NV-E30 Approx. 45m, 30 min. Battery Pack, LCS2012E Video Tuner/Timer Adaptor, NV-V10 AC Adaptor, NV-B11 Wireless Remote Controller, NV-A17 Wired Remote Controller, NV-A13 Car Battery Cord, NV-C12 Video Camera Microphone

Weight and dimensions shown are approximate.
Specifications are subject to change without notice.

Panasonic

Matsushita Electric Trading Co., Ltd.
P.O. Box 288, Central Osaka Japan

INTRODUCTION

This service manual contains technical information which will allows service technicians to understand and service the Panasonic portable PAL VHS Video Tape Recorder Model NV-100.
The NV-100 has many special features as shown below.
These features in addition to the basic PAL VHS Format make the unit an ideal one for your culture and entertainment.

CONTENTS

SYSTEM FEATURES **1-1**

CONTROLS AND COMPONENTS **1-2**

CAMERA RECORDING **1-4**

SYSTEM CONNECTIONS **1-5**

SYSTEM FEATURES

1. Compact and light weight

This truly compact and lightweight Video Cassette Recorder is the result of such developments as simplified construction, the reduction in size of various mechanical parts, and the use of ICs (integrated circuitry).

2. Four hour recording

New system for high-density recording allows up to 4 hours of recording on a single NV-E240 tape.

3. Multi-motion playback

In addition to playback at normal speed, you can operate multi-motion playback as follows.

CUE/REVIEW	forward and reverse at about 5 times normal speed
STILL-FRAME	to view a single scene
FINE-SLOW	for noiseless slow-motion
FRAME ADVANCE	to watch frame-by-frame playback

4. Fine-editing function

The Recorder eliminates the editing problem common to ordinary VTRs. When the pause is used during recording, the tape will automatically rewind slightly to reduce this break to a minimum of interference.

5. Insert Recording

The Recorder enables you to subsitute your desired picture for a previously recorded tape at any segment.

6. Three way power

The Recorder can be operated with a Battery Pack, the Tuner unit, the AC Adaptor or a car battery.

When the unit is used together with an optional tuner (NV-V10).

7. Watch one channel while recording another

The tuner allows the recording of a programme that you don't want to miss while watching another programme.

8. Unattended recording

The Programmable Tuner/Timer enables you to preset the Portable Video Cassette Recorder to record a TV programmes while you are away up to 4 programmes within a period of 14 days.

9. One-Touch Timer Recording

The Tuner enables you to do impromptu timer recordings at any time. Just select the channel and push the One Touch Record Button for 30, 60, 90 or 120 minutes of recording.

10. Optional Remote Controller

Operations may be performed from a distance with the Wired, Wireless Remote Controller.

CONTROLS AND COMPONENTS

TOP and FRONT

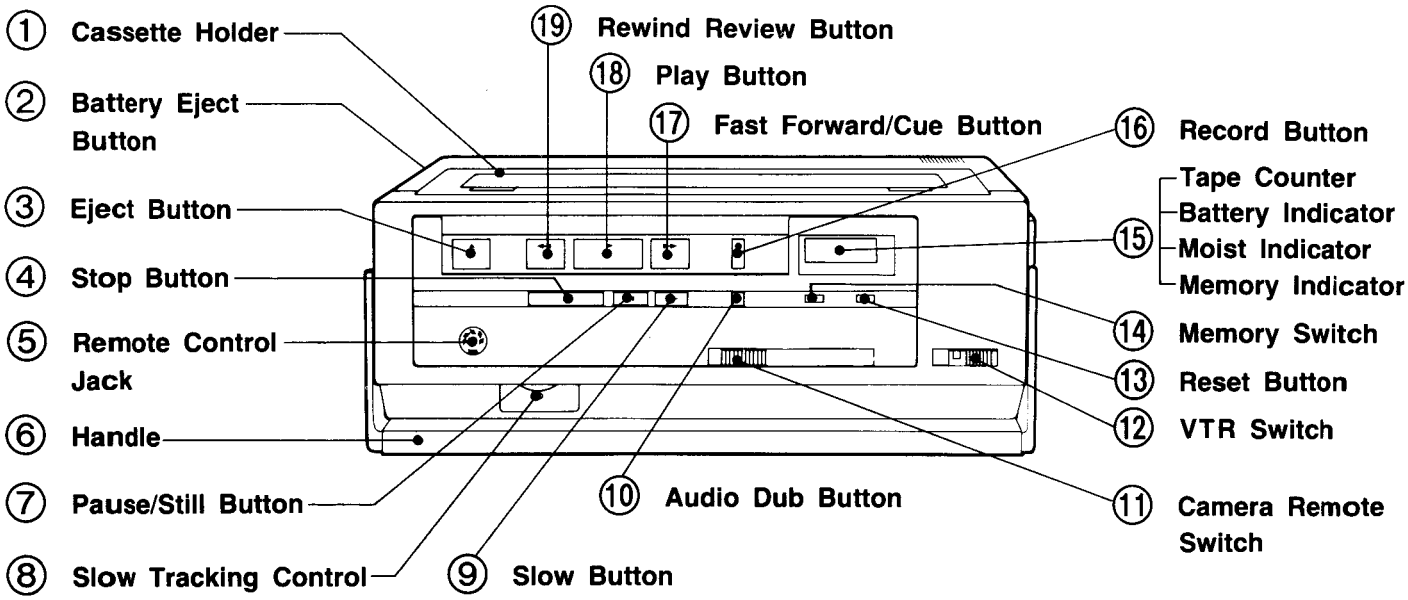

SIDE VIEW

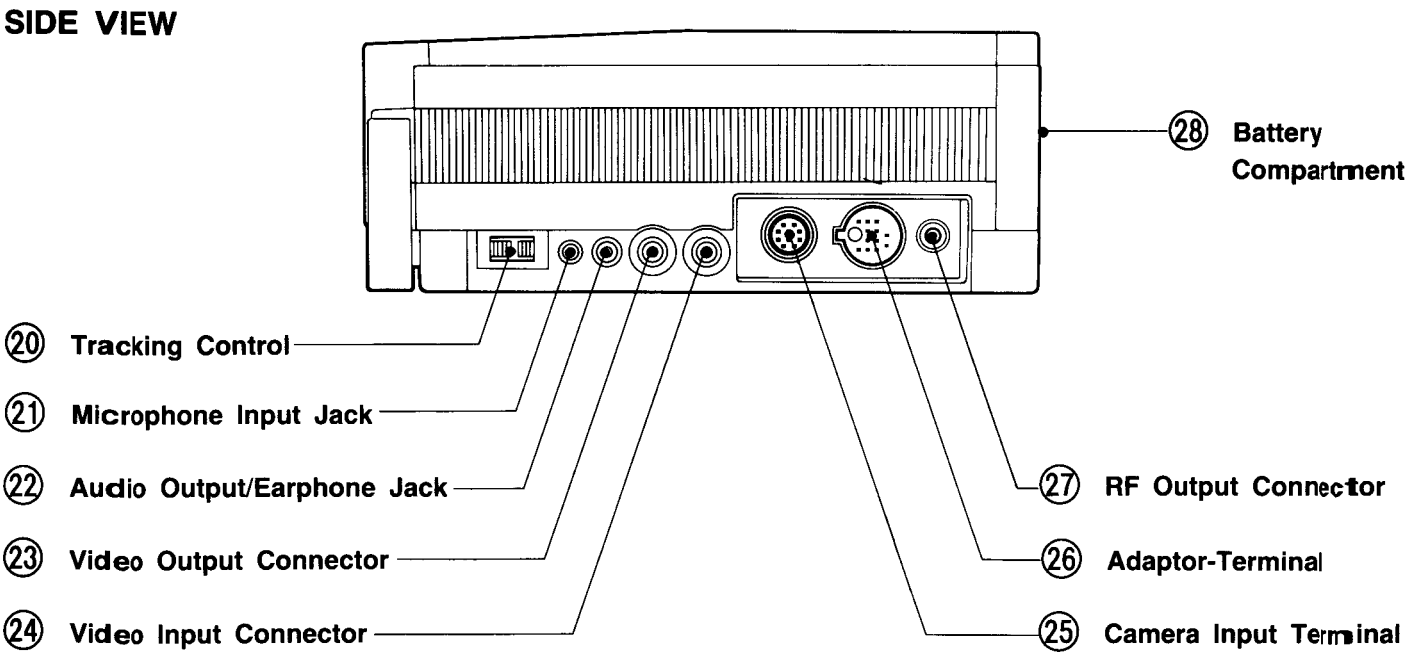

TOP and FRONT

① **Cassette Holder**

② **Battery Eject Button**
To remove the Battery, press this button.

③ **Eject Button**
Press this button to insert or to remove cassette. It is not possible to eject the cassette while the tape is moving or while power is off.

④ **Stop Button**
Press this button to stop the tape.

⑤ **Remote Control Jack**
For connecting the Wired Remote Control unit.

⑥ **Handle**

⑦ **Pause/Still Button**
Press this button to temporarily stop the tape movement in either the recording or playback mode. During playback, a still-frame picture is produced when the pause is in use. Press again to release pause.

⑧ **Slow Tracking Control**
This is used when noise appears on the picture during slow, still picture or frame-by-frame playback operations.

⑨ **Slow Button**
Press this button for slow-motion playback of tapes recorded.

⑩ **Audio Dub Button**
When this button is pressed simultaneously with the Play Button during playback, sound from another source can be recorded on the tape in place of the original sound. (The original sound will be erased.)

⑪ **Camera Remote Switch**
When camera recording, this switch must be set to REMOTE. Set it to NORMAL at other times.

⑫ **VTR Switch**
This switch is used to turn the VTR deck on and off.

⑬ **Reset Button**
Pressing this button causes the Tape Counter to return to "0000".

⑭ **Memory Switch**
When this switch is in the "ON" position, the tape will stop when the Tape Counter reaches "0000" during fast forward and rewind.

⑮ **Tape Counter**
By beginning the recording at "0000" subsequent playback will be more convenient.

Battery Indicator
This indicates the remaining battery charge.

Moist Indicator
If condensation occurs in the VTR, the Moist Indicator will flash on and off to 3 seconds when the VTR is turned on and the VTR will be turned off automatically. In this case, wait until the lamp no longer flashes when the Power Switch is turned on again.

Memory Indicator
"M" is indicated when the Memory Switch is ON.

⑯ **Record Button**
Recording is started by pressing this button and the Play Button at the same time.

⑰ **Fast Forward/Cue Button**
Press this button to move the tape forward rapidly. During the play mode pressing this button will allow you to view the tape in the forward direction at about 5 times the recorded tape speed.

⑱ **Play Button**
Press this button to play back recorded tapes.

⑲ **Rewind/Review Button**
Press this button to rewind tapes. During the play mode pressing this button will allow you to view the tape in reverse at about 5 times the recorded tape speed.

SIDE VIEW

⑳ **Tracking Control**
Use this control during playback if the image is partially obscured by bands of noise.

Noisy Picture

㉑ **Microphone Input Jack**
For connecting an Audio Input Attenuator (included). This is useful for recording and audio dubbing.

㉒ **Audio Output/Earphone Jack**
For connection to a monitor TV, another VTR, audio tape recorder or earphone.

㉓ **Video Output Connector**
For connection to a monitor TV or another VTR.

㉔ **Video Input Connector**
For connection from another VTR.

㉕ **Camera Input Terminal**
For connection of a portable video camera (optional).

㉖ **Adaptor-Terminal**
This can be used to connect the Recorder to the Tuner, the AC Adaptor or the Car Battery Cord with a single connection.

㉗ **RF Output Connector**
For connection to a TV. This connector is the signal output connector from the RF Convertor.

㉘ **Battery Compartment**
Place for LCS-2012E battery fits.

CAMERA RECORDING

The Recorder may be used with an optional Panasonic video camera, and will also work with most other video cameras with a 10-pin camera cable.

First The Camera Remote Switch must be set to ON.

Indoor Camera Recording Connection

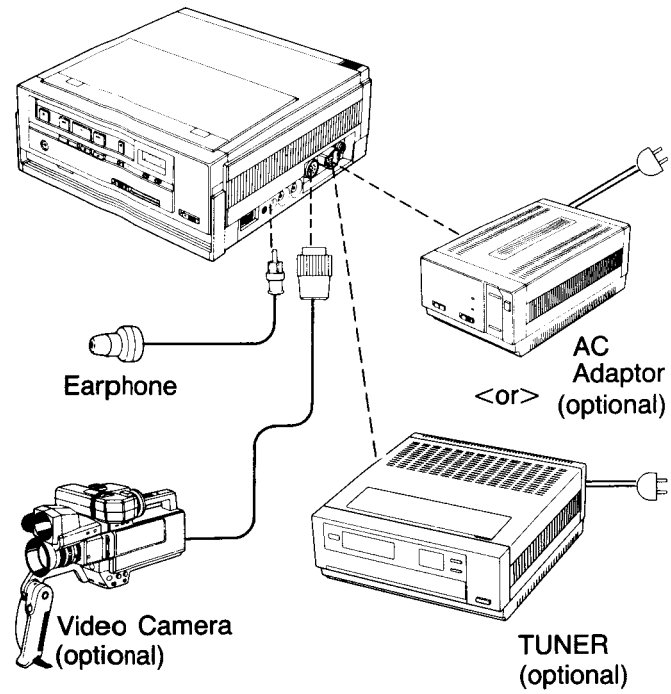

- When you make a camera recording with a video camera designed for this portable VTR, make certain that the VIDEO IN jack of the VTR is free, or the camera remote system will not function.
- If you want to review the tape you have recorded immediately, you can do so with the electronic viewfinder of the camera.

Earphone

You can listen to the sound by connecting the Earphone to Audio Output/Earphone Jack on the Recorder.

NOTE:
If the Battery Pack is used for camera recording, no picture will be monitored on your TV.

Outdoor Camera Recording Connection

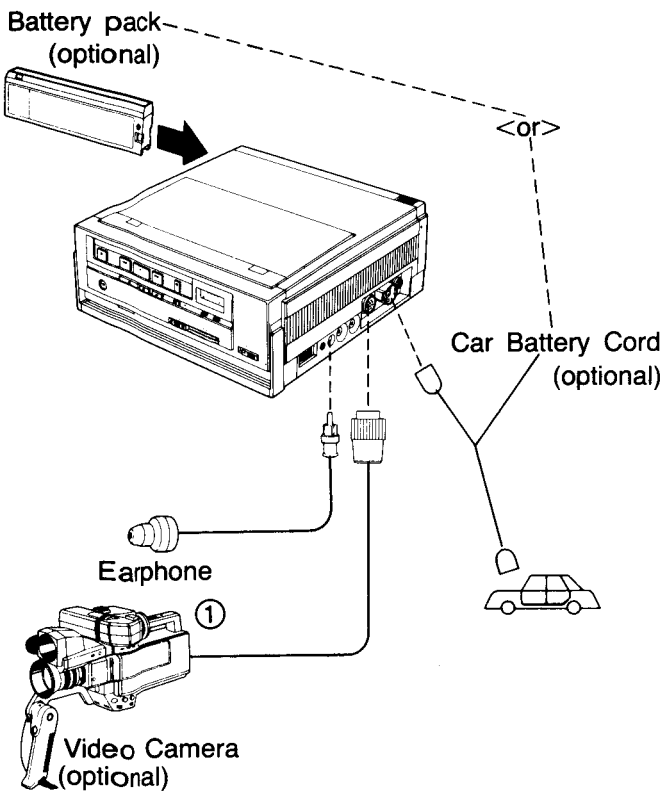

① Make any necessary adjustments on the camera. Refer to the operating instructions of the camera you are using or of the camera designed specially for this Recorder on how to handle the camera and how to start and stop camera recording.

- If you want to review the tape you have recorded immediately, you can do so with the electronic viewfinder of the camera.
- When using the Battery Pack, make sure the Power is OFF, then insert the Battery Pack. Be sure to check the Battery Indicator after turning the Power ON.

SYSTEM CONNECTIONS

For PLAYBACK—Recorded Tape

TV programme can't be recorded with this connection.

■ **Using AC Adaptor/NV-B11 (optional)**
(Refer to the Operating instructions of NV-B11.)

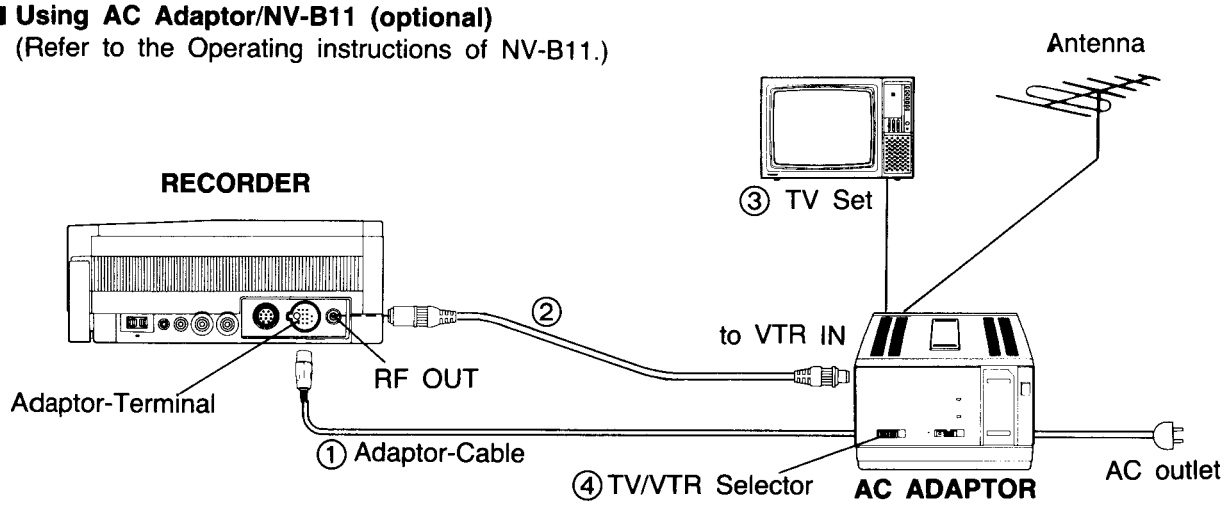

Connect the VTR, TV set and AC adaptor as shown in the figure above. Make sure all the equipment is connected properly.

① Connect the AC ADAPTOR cable to the Adaptor terminal of the recorder.

② Connect RF OUT terminal to VTR IN on the AC ADAPTOR for playback or for watching TV using the DIN RF cable.

③ Turn TV on and select a channel for RF Output.

④ Set the TV/VTR Selector to VTR to watch the playback of a video recording. To watch normal TV programme, set the selector to TV.

NOTE:
If the Video/Camera Input Terminals are connected simultaneously, the two video signals will be superimposed.

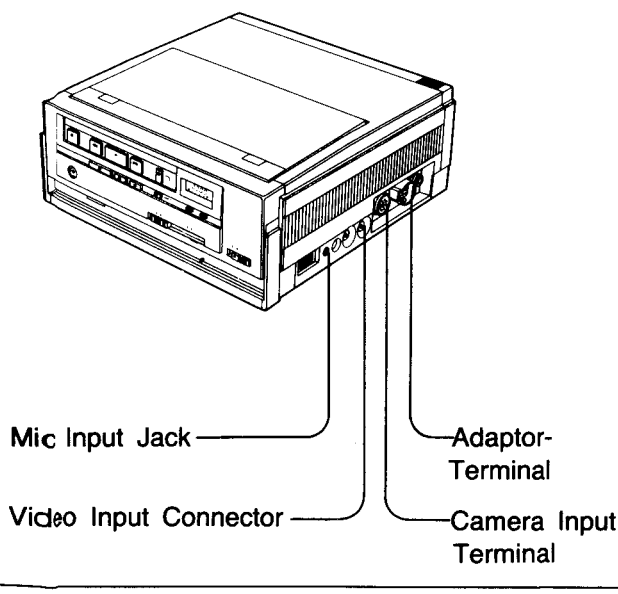

■ **Using Tuner/NV-V10 (optional)**
(Refer to the Operating Instructions of NV-V10.)

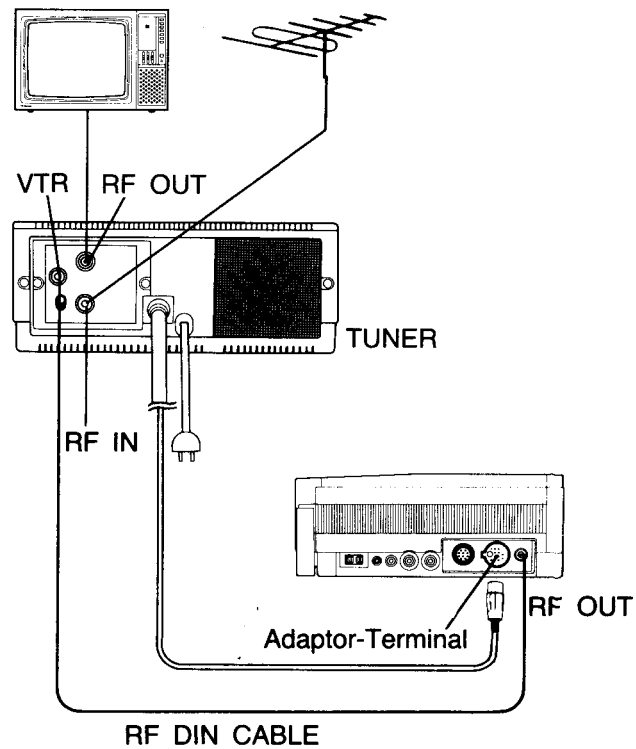

Panasonic

MATSUSHITA ELECTRIC

Printed in Japan

ORDER NO. VRD-8206-099

Service Manual

Portable Video Cassette Recorder

Vol. 2

Panasonic VHS

NV-100 -E -B -EG

Mechanical Adjustment Procedures

Electrical Adjustment Procedures

SPECIFICATIONS

Power Source:	DC 12V
Power Consumption:	Approx. 6.7W at Play mode
Video Recording System:	2 rotary heads, helical scanning system
Tape Speed:	23.39mm/s
Tape Format:	Tape width 12.7mm high density tape
Record/Playback Time:	240 min. with NV-E240
FF/REW Time:	Less than 6.5 min. with NV-E180
VIDEO	
Television System:	CCIR: 625 lines, 50 fields PAL colour signal (PAL/D.D.R SECAM colour signal: NV-100EG only)
Modulation System:	Luminance: FM azimuth recording Colour signal: converted subcarrier phase shift recording
Input Level:	VIDEO IN (BNC): 1.0Vp-p, 75Ω unbalanced
Output Level:	VIDEO OUT (BNC): 1.0Vp-p, 75Ω unbalanced RF Modulated: UHF channel 36 (±4), 75Ω unbananced
AUDIO	
Input Level:	MIC IN (M3): −70dB, more than 600Ω unbalanced 10 pin input, Multi input: −20dB, 2.2kΩ unbalanced
Output Level:	LINE OUT (RCA): −6dB, 600Ω unbalanced Earphone: −10dB, 200Ω unbalanced
Audio Track:	1 track
Video Horizontal Resolution:	Colour: more than 240 lines
Signal-to-Noise Ratio:	Video: more than 40dB Audio: more than 43dB
Audio Frequency Response:	80Hz—10kHz
Operating Room Temperature:	0°C—40°C
Operating Humidity:	35%—80%
Weight:	3.8kg (with internal battery pack)
Dimensions:	236(W)×92(H)×242(D)mm
Standard Accessories:	1 pc. Video Cassette Tape 2 pcs. DIN-RF coaxial cable 1 pc. Audio Input Attenuator 1 pc. Earphone 1 pc. Carrying Case
Optional Accessories:	Video cassette tape: NV-E240 Approx. 344m, 240 min. NV-E180 Approx. 258m, 180 min. NV-E120 Approx. 174m, 120 min. NV-E90 Approx. 130m, 90 min. NV-E60 Approx. 88m, 60 min. NV-E30 Approx. 45m, 30 min. Battery Pack, LCS2012E Video Tuner/Timer Adaptor, NV-V10 AC Adaptor, NV-B11 Wireless Remote Controller, NV-A17 Wired Remote Controller, NV-A13 Car Battery Cord, NV-C12 Video Camera Microphone

Weight and dimensions shown are approximate.
Specifications are subject to change without notice.

Panasonic

Matsushita Electric Trading Co., Ltd.
P.O. Box 288, Central Osaka Japan

CONTENTS

SPECIFICATIONS ..... Cover
MECHANICAL ADJUSTMENT PROCEDURES 2- 1
DISASSEMBLY OF CABINET PARTS 2- 1
1. DISASSEMBLY FLOWCHART 2- 1
2. DISASSEMBLY METHOD 2- 1
ADJUSTMENT PROCEDURES 2- 4
1. REPLACEMENT OF UPPER CYLINDER UNIT 2- 4
2. REPLACEMENT OF D.D. CYLINDER UNIT 2- 4
3. CONFIRMATION OF BRAKE TORQUE 2- 6
4. CONFIRMATION OF TAKEUP TORQUE 2- 6
5. POSITON ADJUSTMENT OF TENSION POST 2- 7
6. MEASUREMENT OF AND ADJUSTMENT OF BACK TENSION 2- 7
7. HEIGHT ADJUSTMENT OF REEL TABLES 2- 8
8. HEIGHT ADJUSTMENT OF TAPE GUIDE POSTS 2- 9
9. HEIGHT ADJUSTMNET OF PULL-OUT POST 2-10
10. TAPE INTERCHANGEABILITY ADJUSTMENT 2-10
11. TENSION ADJUSTMENT OF TIMING BELT 2-13
12. ADJUSTMENT OF F.G HEAD GAP 2-13
13. CONFIRMATION / ADJUSTMENT OF THRUST GAP 2-14
14. ASSEMBLY AND ADJUSTMENT OF GEARS AND RODS 2-15
15. POSITION ADJUSTMENT OF CASSETTE UP HOLDER 2-18
16. ADJUSTMENT OF LEAF SWITCHES 2-18
17. POSITION ADJUSTMENT OF RECORDING SAFETY SWITCH 2-19
Servicing Fixtures & Tools 2-20
ELECTRICAL ADJUSTMENT PROCEDURES 2-21
1. Test Equipment 2-21
2. Adjustment Procedures 2-21
2-1. A.V.R. Section 2-21
2-2. System Control Section 2-22
2-3. Servo Section 2-22
2-4. Audio Section 2-26
2-5. Video Section 2-27
LOCATION OF TEST POINTS AND CONTROLS 2-30

MECHANICAL ADJUSTMENT PROCEDURES

DISASSEMBLY OF CABINET PARTS

1. DISASSEMBLY FLOWCHART

This flowchart indicates disassembly steps of the cabinet parts and the Bottom P.C.B.s in order to gain access to the items necessary for servicing. When reassembling, perform the steps in the reverse order. The bottom plate can be removed individually.

Notes:
1. When removing the front panel, work with care so as not to break the locking portions.
2. Adjustments are required if the Cassette Up Holder was replaced.

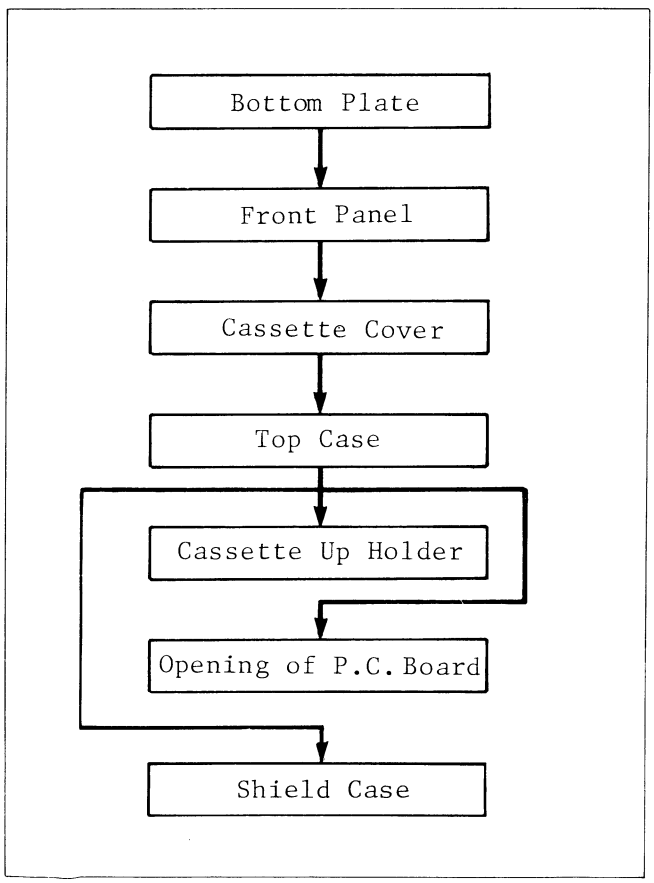

Fig. M1 Disassembly Flowchart

2. DISASSEMBLY METHOD

Notes:
a. Place the cloth or any other soft materials under the P.C. Boards or deck for preventing them being damaged while servicing.
b. When reinstalling, ensure the connectors are connected and any electrical components are not damaged.

2-1. Removal of the Bottom Plate

1. Place the deck upside down so the bottom plate faces upward.
2. Remove 4 screws (A). Then remove the bottom case by lifting the rear portion of it.

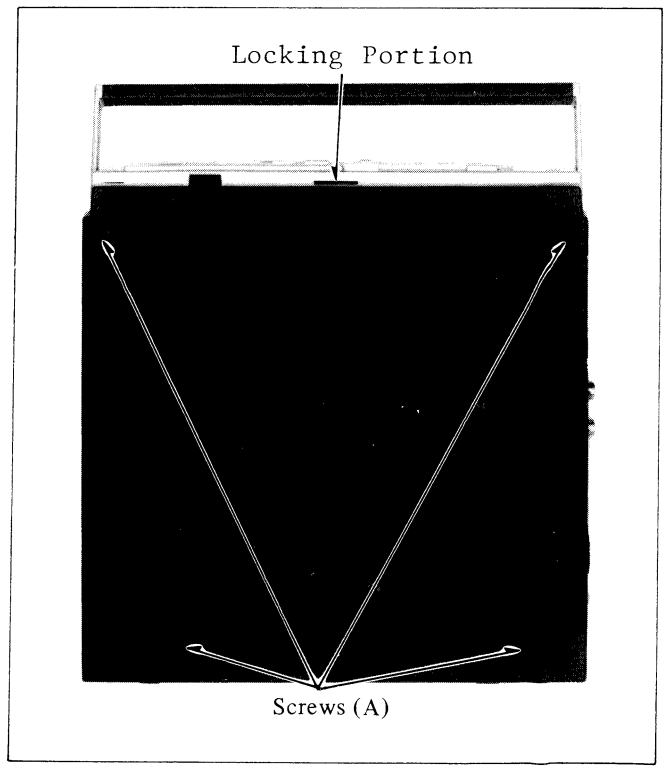

Fig. M2 Removal of the Bottom Plate

Note:
When reinstalling, first insert the locking portion into the slot of the front panel.

2-2. Removal of the Front Panel

1. Remove the CAMERA/REMOTE switch knob, unlock the locking portions and hold the both right and left ends of the front panel. Then carefully lift and turn the top portion of it to remove. And remove the connectors (P23 and Earth line).

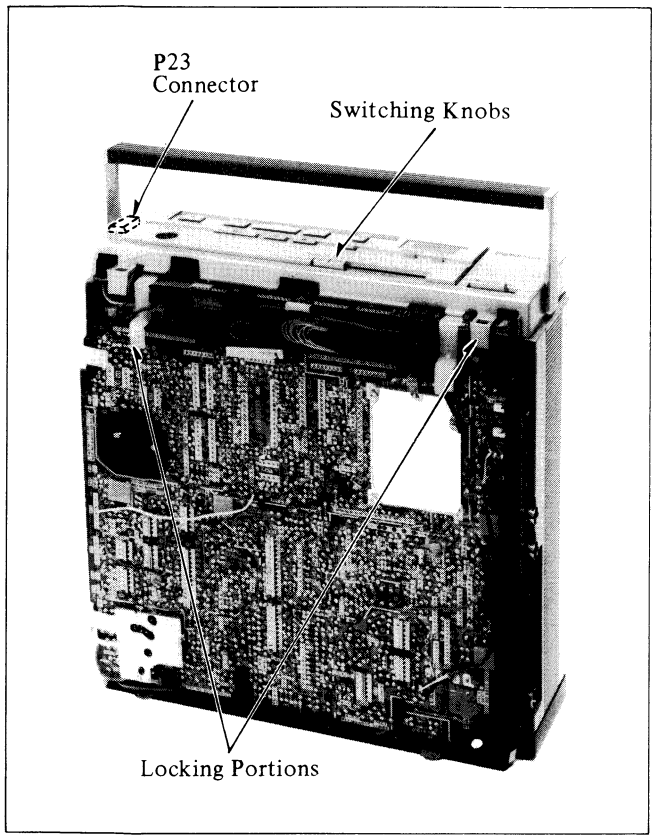

Fig. M3. Removal of the Front Panel

Note:
Work this step with extreme care for not being damaged on the locking portions.

2-3. Removal of the Cassette Cover

Supply the power to the deck and turn it on. Then press the EJECT button to raise the cassette up holder. Remove 2 rubbers and 2 screws (B). Then carefully lift and turn the front portion of it to remove. Pay attention for not being damaged on the locking portions.

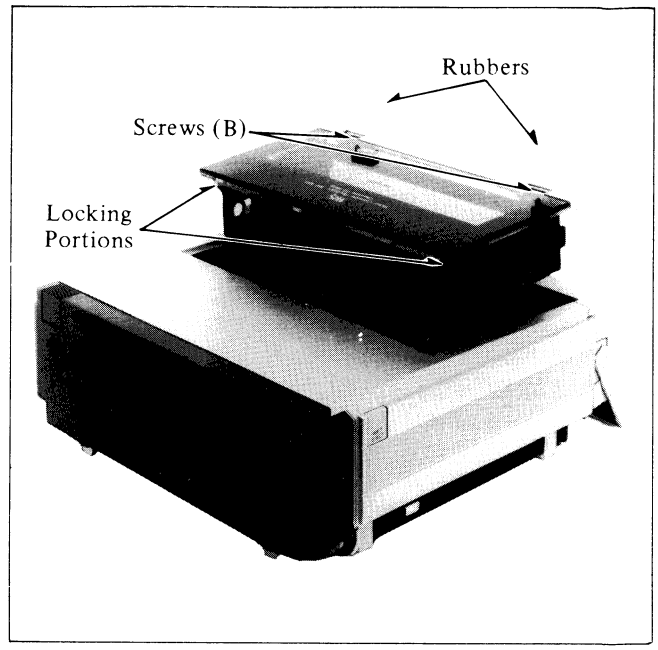

Fig. M4. Removal of the Cassette Cover

Note:
When reinstalling, first suit the locking portions of the cassette holder unit.

2-4. Removal of the Top Case

1. First confirm that the battery is inside the battery compartment or not. If it is, take the battery out.
2. Remove 2 screws (C). Then remove the top case.

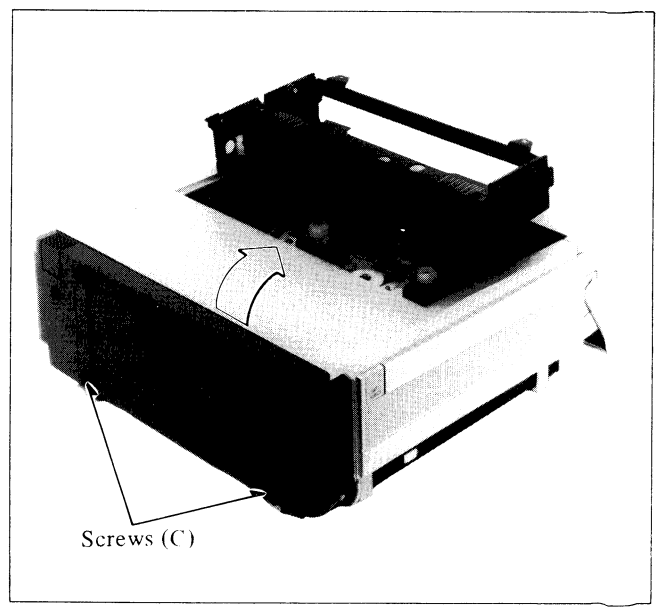

Fig. M5. Removal of the Top Case

2-5. Removal of the Cassette Up Holder

Remove 2 connectors P40 and P41. Then unlock the 2 locking portions and open the Front P.C. Board. Then remove 6 screws (D), and remove the cassette up holder.

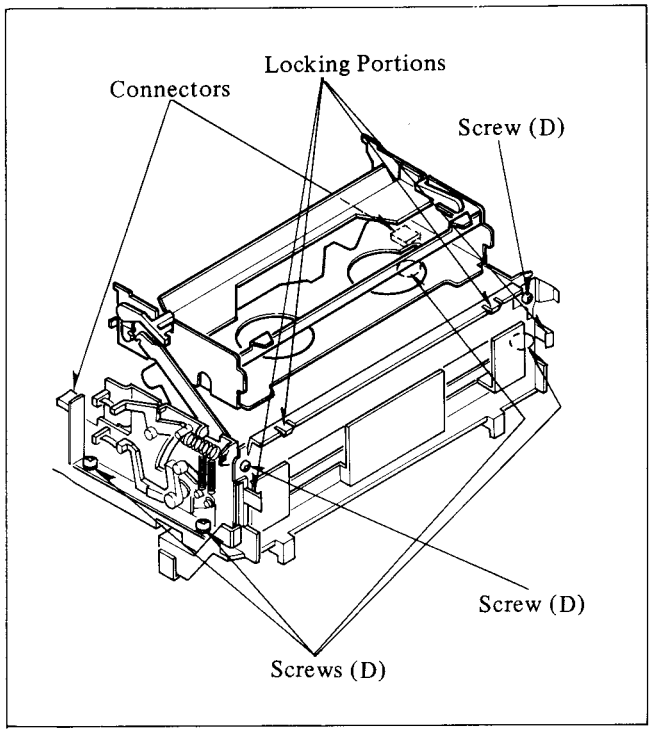

Fig. M6. Removal of the Cassette Up Holder

Note:

When this part was removed or replaced the final adjustment is required. Refer to "ADJUSTMENT OF CASSETTE UP HOLDER" section.

2-6. Opening of the P.C. Board

Unlock the 6 locking portions, remove the plastic rivet and disconnect the connector P1 then open the P.C. Board.

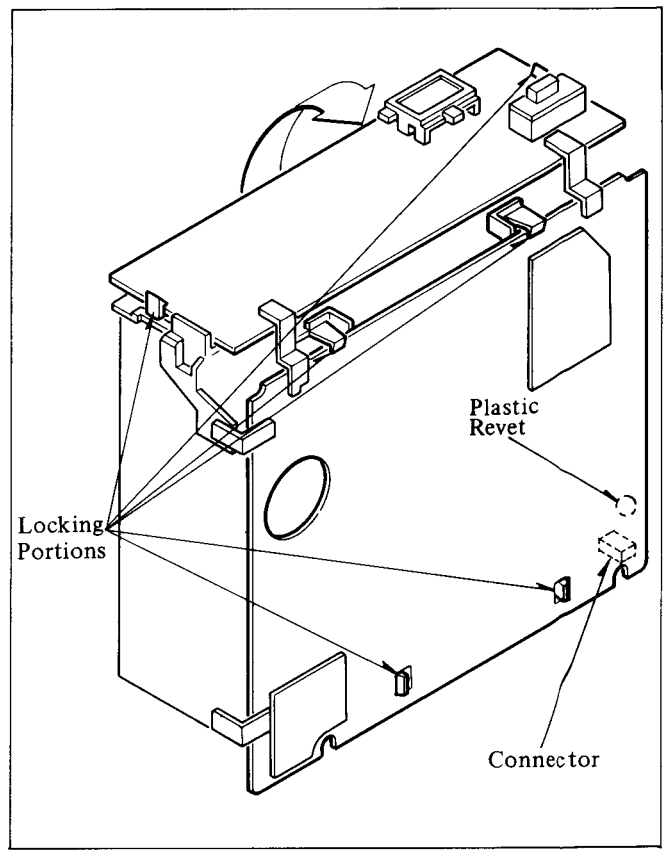

Fig. M7. Opening of the P.C. Board

2-7. Removal of the Shield Case

Remove the 2 screws (E) and the plastic rivet. Then carefully lift it up to remove.

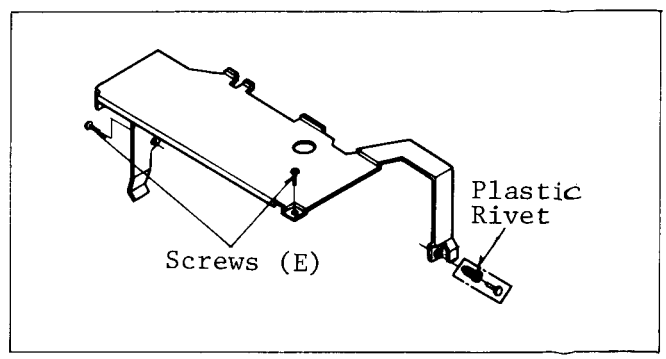

Fig. M8. Removal of the Shield Case

ADJUSTMENT PROCEDURES

1. REPLACEMENT OF UPPER CYLINDER UNIT

Work with extreme care when removing or replacing the upper cylinder unit. Do not touch video heads during servicing.

1. Unsolder the 4 wires which are color-corded to matching wires on the head relay board.
2. Remove the 2 screws and gently lift the upper cylinder unit from the shaft.

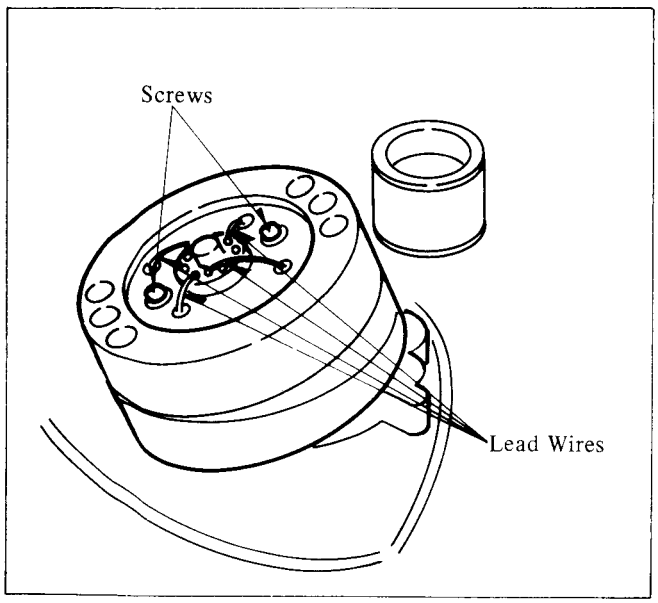

Fig. M9. Replacement of Upper Cylinder Unit–(1)

3. Before reinstalling a new unit, clean the DD cylinder shaft and the surface that engages with on the upper cylinder with a soft cloth dampened with freon liquid.

Fig. M10. Replacement of Upper Cylinder Unit–(2)

4. Install new unit so that the color cord of the head relay board. Tighten the 2 screws and resolder the 4 wires to the head relay board.

Note:
Upon completion of replacement, confirm performance. And if required, perform "TAPE INTERCHANGEABILITY ADJUSTMENT".

2. REPLACEMENT OF D.D. CYLINDER UNIT

Work with extreme care when removing or replacing the DD cylinder unit. Do not touch video heads during servicing.

1. Disconnect the connector cover on P001 and 2 connectors P001 (on top side) and P002 (on bottom side) from the DD cylinder unit.
2. Remove the screw (A) and discharge angle.
3. Remove the DD cylinder unit and cylinder cover by removing 5 screws (B).

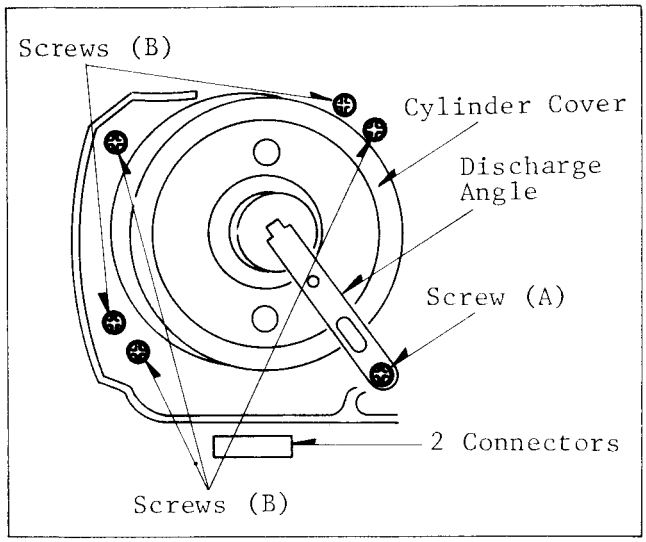

Fig. M11. Replacement of D.D. Cylinder Unit–(1)

Note:
Since there is very little clearance between DD cylinder unit and chassis, remove the DD cylinder unit gently and carefully.

4. Reinstall the new DD cylinder unit, restore the wires and connect the P001 and P002.

Notes:
1. When reinstall the New DD Cylinder unit, fit the new DD cylinder unit to the chassis by turn counterclockwise it.

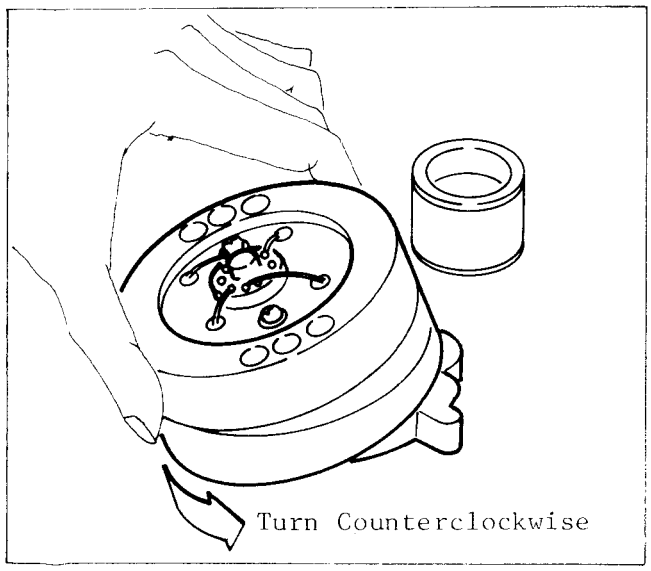

Fig. M12. Replacement of D.D. Cylinder Unit–(2)

2. Upon completion of replacement, confirm performance. If any further maintenance is required, perform "TAPE INTERCHANGEABILITY ADJUSTMENT".

3. CONFIRMATION OF BRAKE TORQUE

Equipment Required:
Dial Torque Gauge VFK0133
Adaptor for Gauge VFK0134

1. Attach the adaptor to the torque gauge and place the deck in STOP mode.
2. Place the torque gauge on the reel table. The weight of gauge should not rest on the reel table.

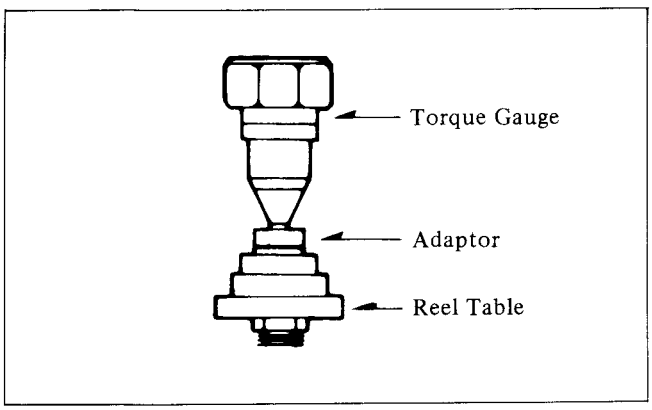

Fig. M13. Confirmation of Brake Torque–(1)

3. Turn torque gauge in either direction indicated in the Fig. M15 and read the gauge when the brake begins slipping.

Note:
If proper brake torque can not be obtained, clean the rotating surface of reel table with a soft cloth and recheck torque before replacing brake drum.

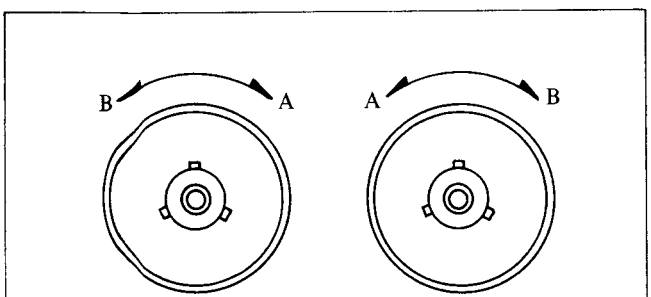

	A	B
Takeup	300g.cm ∿ 800g.cm	70 ∿ 150g.cm
Supply		

Fig. M14. Confirmation of Brake Torque–(2)

4. CONFIRMATION OF TAKE-UP TORQUE

Equipment Required:
Dial Torque Gauge VFK0133
Adaptor for Gauge VFK0134
Specifications:
in PLAY mode ..... 125 ± 20g.cm
in FF mode ..... more than 400g.cm
in REW mode ..... more than 400g.cm
in REV mode ..... 170 ± 25g.cm

1. Attach the adaptor to the torque gauge.
2. Cover the take-up and supply phototransistors with black tape. Lower the cassette up holder (without cassette cover), and turn power switch on.
3. Place the torque gauge on the take-up reel table, push the play button and read torque on the gauge. Repeat in FF mode by pushing the FF button.

Note:
While measuring, the weight of the gauge should not rest on the reel table.

4. Set the torque gauge on the supply reel table, press the rewind button to check REW mode torque.
5. Repeat in REV mode by pushing the REW button in playback mode.
6. Remove the black tape that covered the phototransistors.

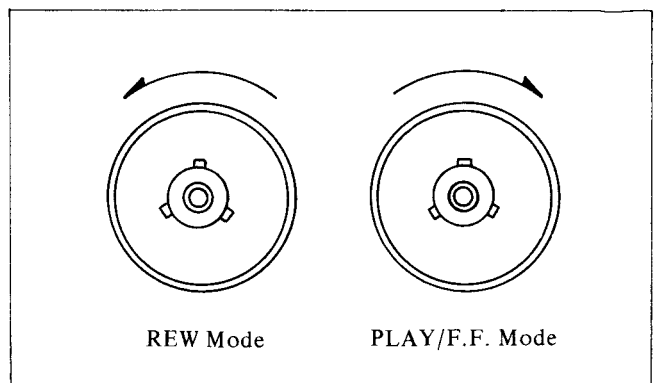

PLAY Mode	125± 20g.cm
F.F. Mode	more than 400g.cm
REW Mode	more than 400g.cm
REV Mode	70 ± 25g.cm

Fig. M15. Confirmation of Takeup Torque

5. POSITION ADJUSTMENT OF TENSION POST

Equipment Required:
Tension Post Adjustment Plate
..... VFK0241
Fine Adjustment Screwdriver
..... VFK0136

1. Cover the phototransistor with black tape. Lower the cassette up holder (without cassette cover), and turn power switch on.
2. Push the play button for loading. As soon as the loading is completed, disconnect the Adaptor Connector.
3. Then remove the cassette up holder.
4. Place the adjustment plate over the reels and slightly loosen the screw (A) securing the tension band bracket.
5. Insert the fine adjustment screwdriver into the hole and move the tension band bracket in either of direction so that the tension post just touches the adjustment plate. The tension post removes from the adjustment plate by turning the fine adjustment screwdriver counterclockwise. Then turn it clockwise until the tension post just touches the adjustment plate and tighten the mounting screw.

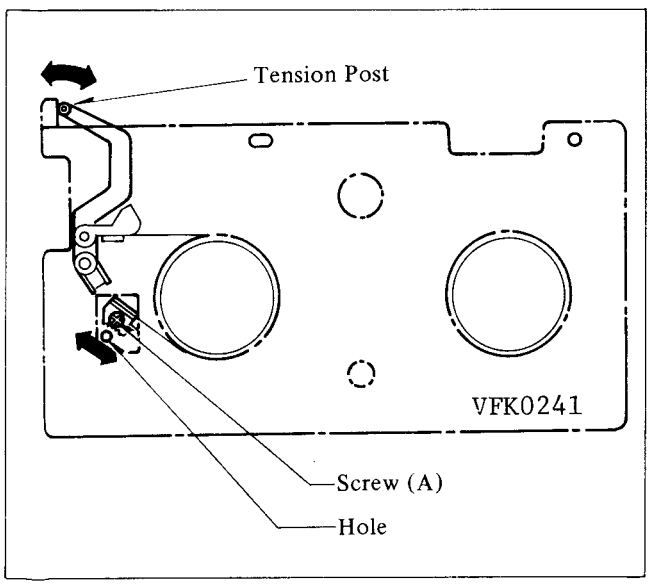

Fig. M16. Position Adjustment of Tension Post

6. MEASUREMENT AND ADJUSTMENT OF BACK TENSION

A. Measurement Procedure

Equipment Required:
Back Tension Meter
..... Tentelometer
Model T2-H7-UM
Purchase Locally
VHS Cassette Tape .... 120 Minutes tape
Specification: 25 ∿ 30g

1. Pull the erase head in the direction indicated by the arrow and hold it by adhesive tape.
2. Play back the cassette tape from its beginning and wait until tape running has stabilized. (for approx. 10 to 20sec)
3. Insert tension meter in tape path and confirm reading.
4. If the reading is out of spec., continuously perform the adjustment procedure.

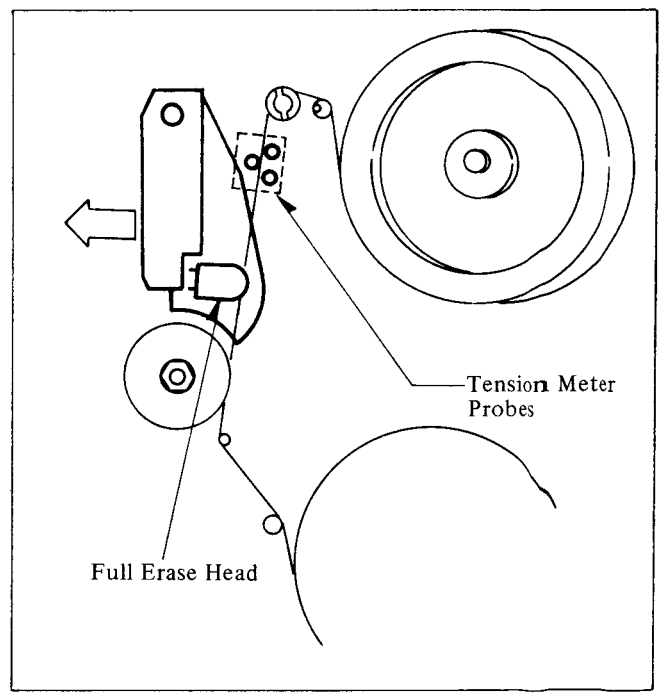

Fig. M17. Measurement of Back Tension

Notes:

1. Make sure that the three probes of the meter are all in good contact with tape, but out of contact with any part while measuring.
2. It is recommended to be measured three times as tension meter is very sensitive.

B. Adjustment Procedure

Equipment Required:
Fine Adjustment Screwdriver
..... VFK0136

1. Loosen a screw (A) and insert the fine adjustment screwdriver into the hole (B).
2. Turn the screwdriver in either of direction indicated by the arrow to obtain the specified tension. Turn the screwdriver clockwise to lower tension, counterclockwise to raise it.

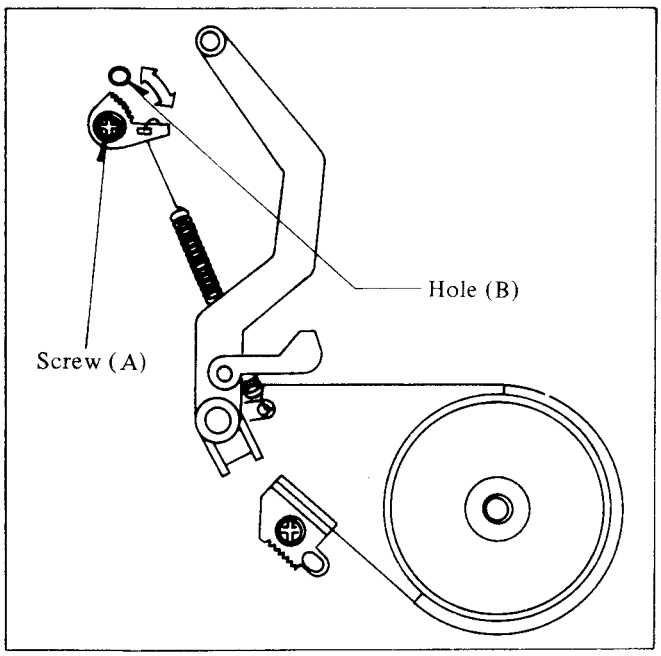

Fig. M18. Adjustment of Back Tension

3. Tighten the screw (A) and verify tension with the meter once again.

Note:
Upon completion of adjustment, remove the adhesive tape.

7. HEIGHT ADJUSTMENT OF REEL TABLES

Equipment Required:
Post Adjustment Plate VFK0191
Reel Table Height Gauge VFK0190
Specification ..... ±0.1mm

* Cut-out surface of VFK0191 is reference of height of reel tables and their height are measured based on this reference.

1. Place the post adjustment plate over the reels, and put the gauge on it. Set the gauge to zero "0" with the condition that the foot scraper of the gauge touches the cut-out portion of the plate.

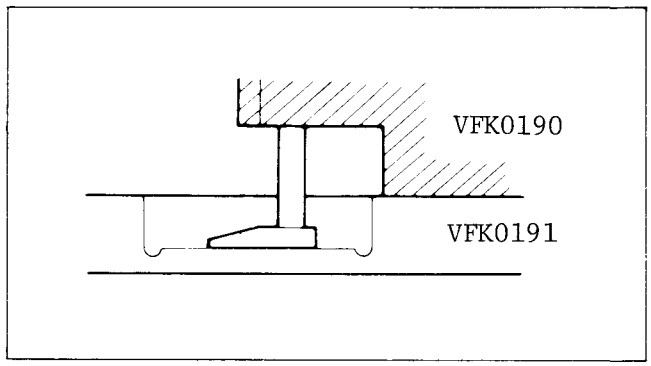

Fig. M19. Height Adjustment of Reel Tables–(1)

2. Then measure the top portion of reel table and confirm the difference against the condition just performed in former step. Do same for the other reel table.

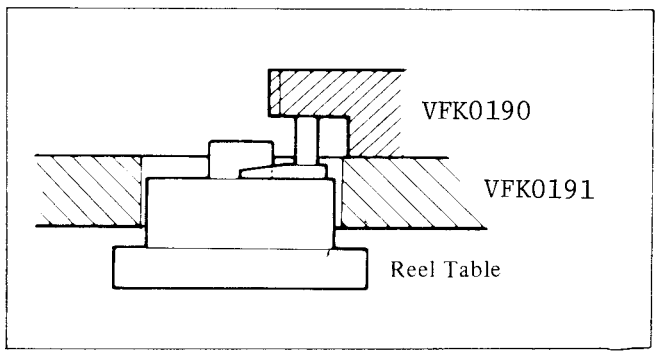

Fig. M20. Height Adjustment of Reel Tables–(2)

3. If the difference of reading of gauge between height at cut-out portion of VFK0191 and the height of reel tables is more than 0.1mm (higher or lower), adjust the height of reel to obtain the specified height.
4. For adjustment, change the poly slider washer located under the reel table. The washer is available in three sizes of thickness, t = 0.13mm, 0.25mm and 0.5mm.

8. HEIGHT ADJUSTMENT OF TAPE GUIDE POSTS

Equipment Required:
Hex. Wrench (0.9mm) VFK0146
Post Adjustment Plate VFK0191
Reel Table Height Gauge VFK0190
Nut Driver (5.5mm) ... Purchase Locally
Post Adjustment Screwdriver
..... VFK0137

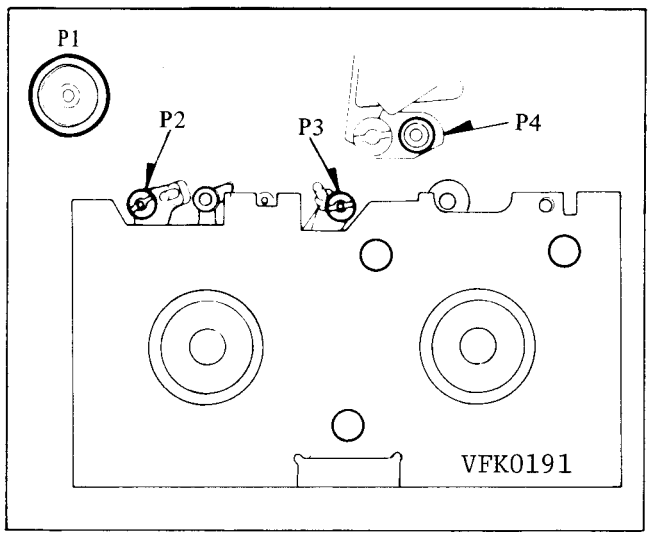

Fig. M21. Height Adjustment of Tape Guide Posts–(1)

1. First install the post adjustment plate and lower all posts so that the condition as shown. (Lower end of post, tape guide, should be lower than foot of gauge.) Loosen a hex. screw located on the lower portion of posts (P2 & P3) then turn the top of the posts with post adjustment screwdriver.

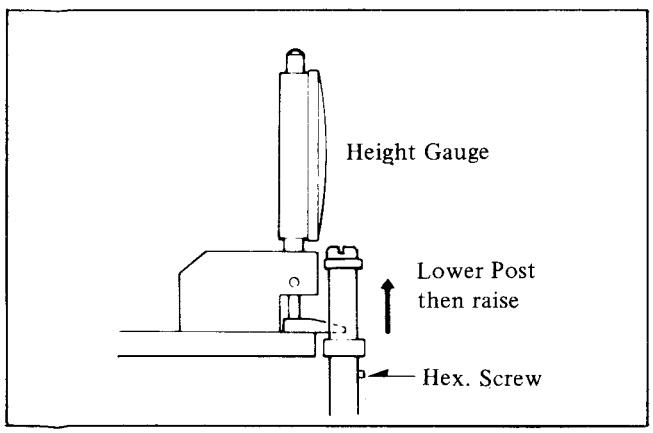

Fig. M22. Height Adjustment of Tape Guide Posts–(2)

2. Place the height gauge on the adjustment plate and fit the foot of gauge to the post. The condition to fit the foot of gauge should be as shown.
(The foot of gauge should be fully lowered till it touches the plate.)

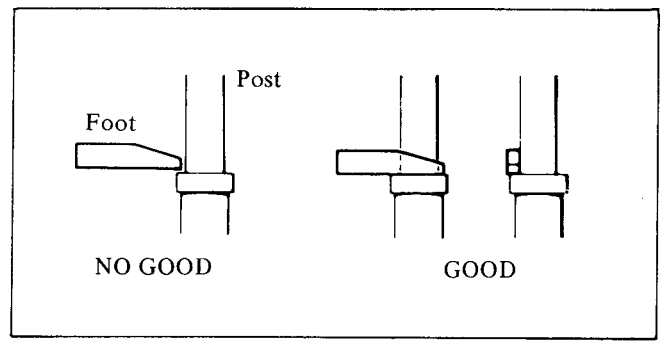

Fig. M23. Height Adjustment of Tape Guide Posts–(3)

3. Set the height gauge to zero and slowly raise the post until it just touches the foot of gauge. For adjustment of P1 & P4, use the nut driver.

Note:
Upon completion of adjustment, tighten hex. screws on P2 and P3 and install the post cap on P4. When the post cap on P4 is reinstalled, the direction of it should be as shown below viewing from the direction indicated by the arrow.

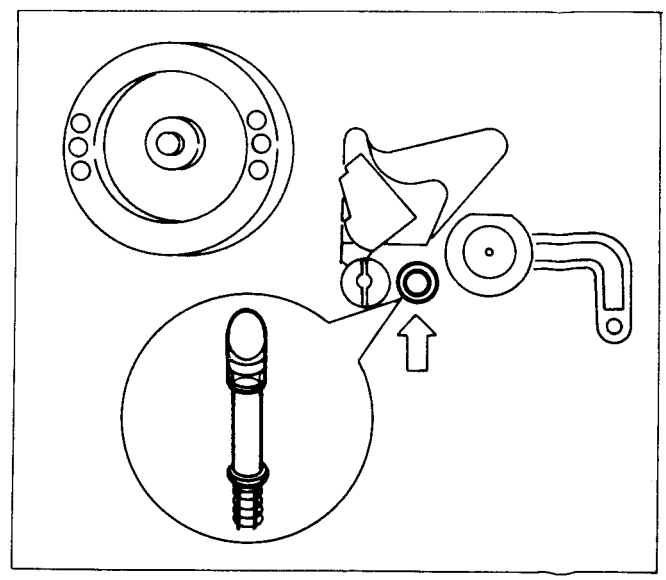

Fig. M24. Height Adjustment of Tape Guide Posts–(4)

9. HEIGHT ADJUSTMENT OF PULL OUT POST

Notes:
1. The adjustment should be performed after the adjustment of P4 as the spec. is based on height of P4.
2. The adjustment should be performed in the Loading completion mode.
3. Unless the replacement or adjustment of this post is completed, remove the Adaptor-Connector.

Equipment Required:
Post Adjustment Plate VFK0191
Reel Table Height Gauge VFK0190
Nut Driver (5.5mm) ... Purchase Locally
Specification: 0.02mm ∿ 0.06mm

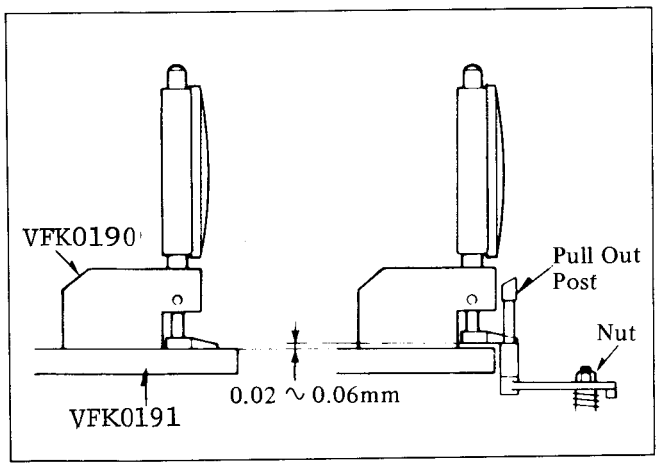

Fig. M25. Height Adjustment of Pull Out Post

1. Turn power switch on, cover the take-up and supply phototransistors with black tape, press the cassette up holder down and push the play button for loading.
2. As soon as loading is completed, disconnect the Adaptor-Connector and remove the cassette up holder.
3. Place the post adjustment plate, put the reel table height gauge on the plate and set height gauge to zero with condition the foot touches on the height adjustment plate.
4. Slightly lower the post by turning the nut clockwise. Fit the foot to the post so that the condition becomes as shown in Fig. M25.
5. Then slowly and slightly turn the nut till the gauge reads specified height.
6. Reinstall the cassette up holder and remove the black tape that covered the phototransistors and reconnect for unloading.

10. TAPE INTERCHANGEABILITY ADJUSTMENT

Note:
To perform these adjustment/confirmation procedures, make sure that the tracking control is set into the detent (fixed) position.

Equipment Required:
Alignment Tape VFM8100H3D
Post Adjustment Screwdriver
..... VFK0137
H-Position Adjustment Screwdriver
..... VFK0189
Hex. Wrench (0.9mm) VFK0146
Hex. Wrench (1.5mm) VFK75
Nut Driver (5.5mm)
..... Purchase Locally
Oscilloscope

10-1. Confirmation of Tape Travel

1. Playback a cassette tape and confirm that the tape travels without curling at the edges of the tape.

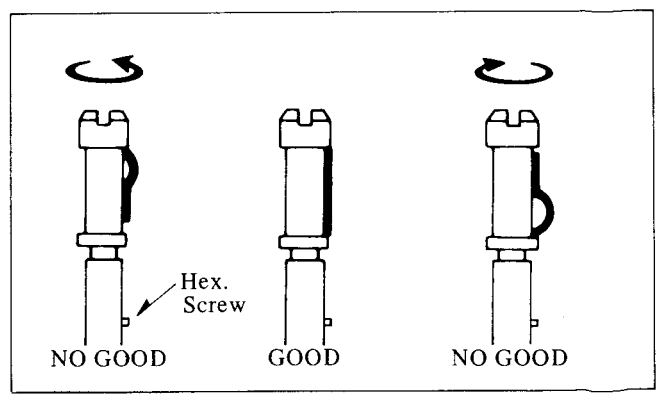

Fig. M26. Confirmation of Tape Travel

2. If curling is apparent, adjust the height of posts by turning the top of post with the post adjustment screwdriver (for P2 & P3).

Note:
Before turning P2 and P3, slightly loosen a hex. screw.

10-2. Confirmation of A/C Head Height

Note:
Unless the A/C Head is replaced, this procedure should not be performed.

1. Looking at the lower edge of the control head with the tape running, ensure that the lower edge of the tape runs along the lower edge of the control head. If it doesn't, slightly turn the nut (A) in either direction to correct. Clockwise to lower the head and counterclockwise to raise it.

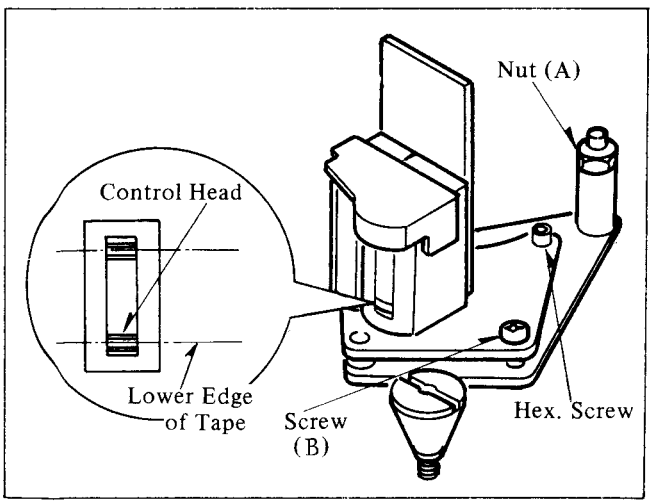

Fig. M27. Confirmation of A/C Head Height

10-3. Adjustment of A/C Head Height

1. Connect the oscilloscope to the audio output on the right side of the deck.
2. Playback the monoscope portion (6kHz, Audio) of the alignment tape, VFM8100H3D.

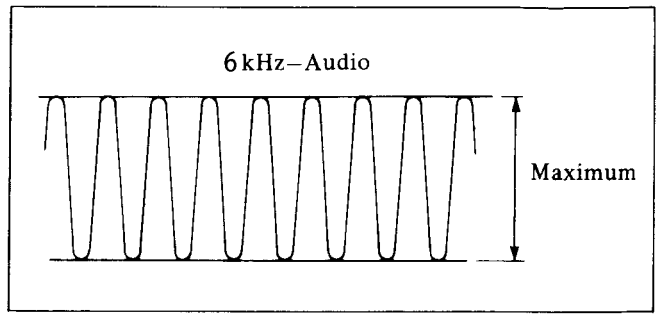

Fig. M28. Adjustment of A/C Head Height

3. Adjust the screw (B) on the head base so the output level becomes maximum.

10-4. Confirmation of A/C Head Tilt

Note:
Unless P4 is adjusted, (See Fig. M25) this procedure should not be performed. Playback the tape and confirm that the tape runs between lower and top limiters of the post. If the lower edge or top edge of the tape turns with waving or frilling, then correct the tilt of the A/C Head by turning hex. screw. (A hex. screw is shown in Fig. M27.)

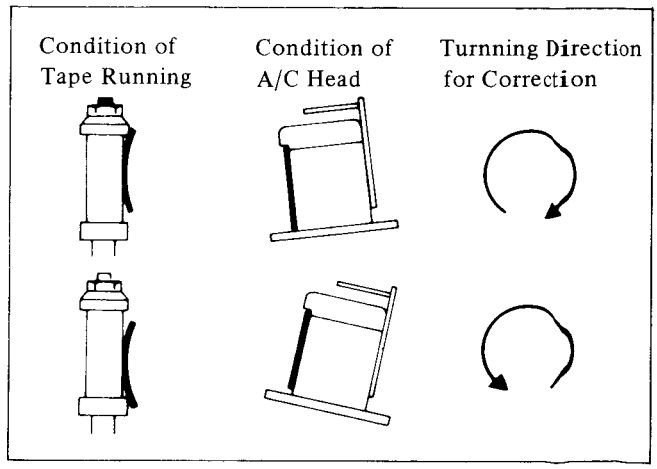

Fig. M29. Confirmation of Tilt of A/C Head

10-5. Horizontal Position Adjustment of A/C Head

1. Set the tracking control to the detent (fixed) position. Connect the oscilloscope to the Test Point (TP3009).
2. Playback the monoscope portion of the alignment tape and confirm the envelope figure.
3. If adjustment is required, set the H-position adjustment screwdriver into the slot of the adjustment nut and rotate in either direction to obtain maximum envelope output.

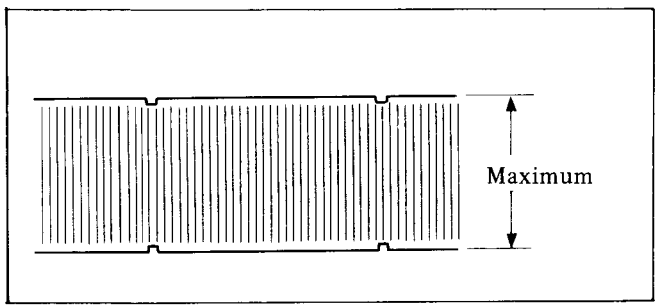

Fig. M30. Horizontal Position Adjustment of A/C Head(1)

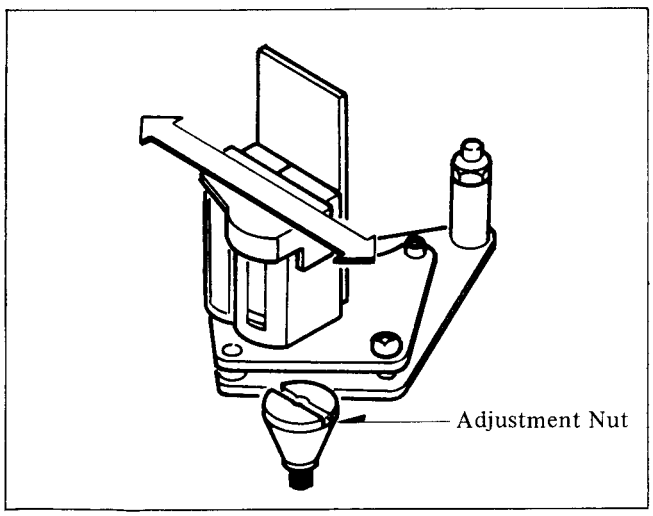

Fig. M31. Horizontal Position Adjustment of A/C Head(2)

10-6. Confirmation/Adjustment of Envelope Output

1. Set the tracking control in the detent (fixed) position. Connect the oscilloscope to Test Point (TP3009).
2. Playback the monoscope portion of the alignment tape VFM8080H2, adjust posts P2 and P3 while watching the scope display so that RF envelope on the scope becomes as flat as possible.

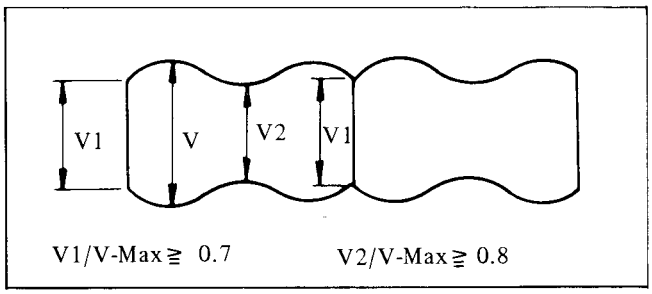

Fig. M32. Confirmation of Envelope Output

3. If the scope display is as follows, adjust the height of P2 shown in Fig. M21.

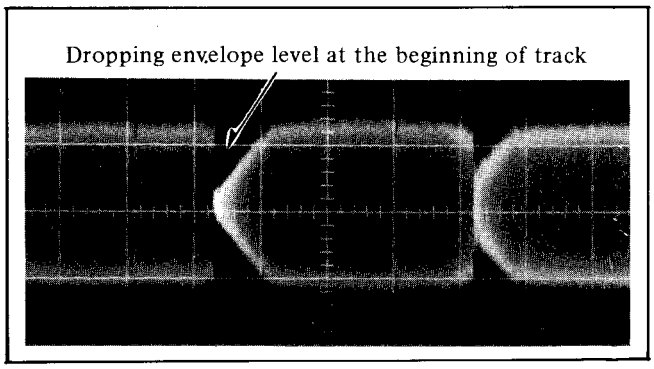

Fig. M33. Adjustment of Envelope Output–(1)

4. If the scope display is ás follows, adjust the height of P3 shown in Fig. M21.

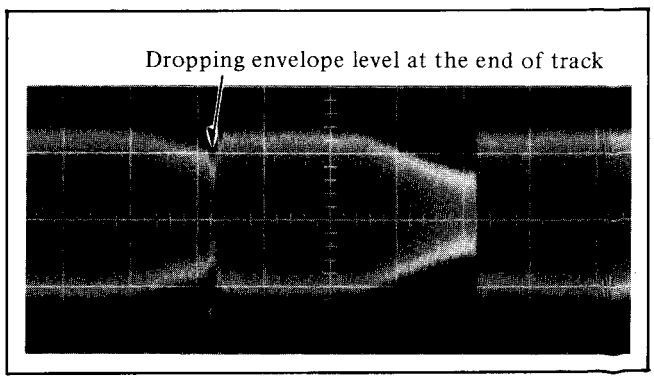

Fig. M34. Adjustment of Envelope Output–(2)

5. The scope display with P2 and P3 adjusted correctly should be as shown in Fig. M35.

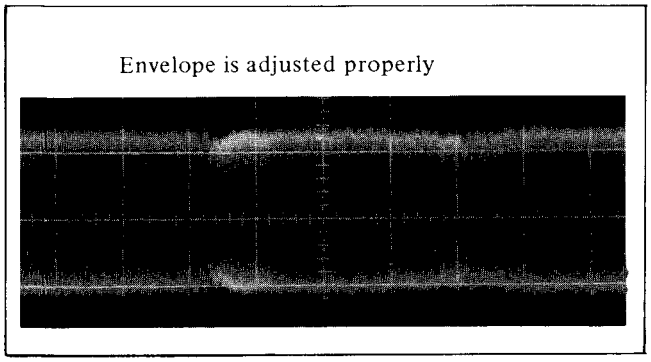

Fig. M35. Adjustment of Envelope Output-(3)

6. When adjustment is required, turn slowly and wait for servo lock. Be sure the tape travels over the post as shown.

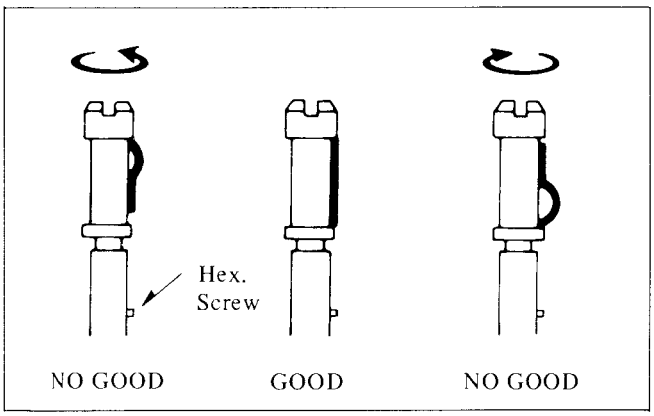

Fig. M36. Adjustment of Envelope Output-(4)

11. TENSION ADJUSTMENT OF TIMING BELT

Equipment Required:
Fan-type Tension Gauge VFK66
Specification: 300 ± 100g

1. Loosen a screw (A), remove the spring (A) and push the Idler Pressure Lever by the fan-type tension gauge.
2. When the gauge reads the specified pressure, tighten a screw (A).
3. Reinstall the spring (A).

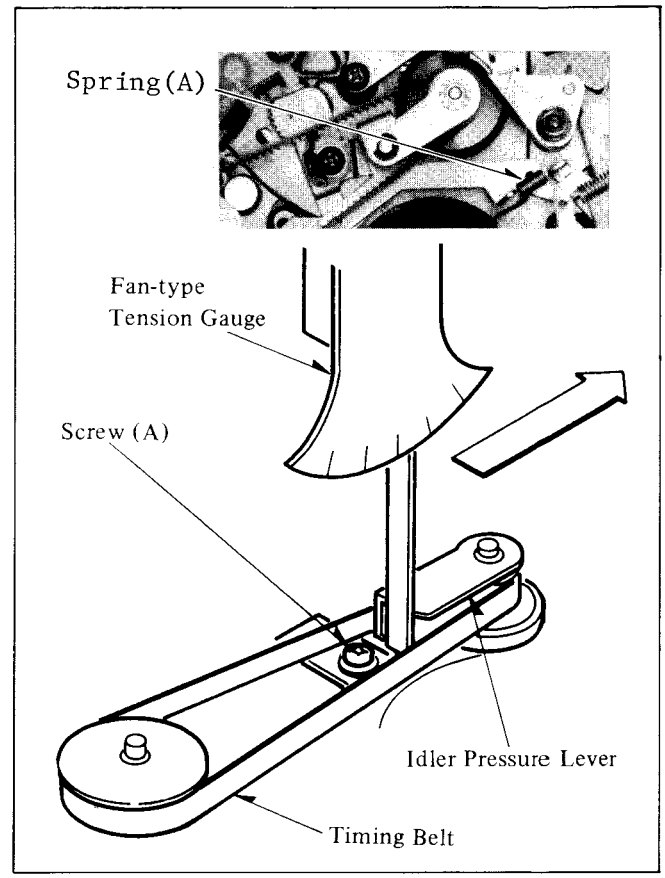

Fig. M37. Tension Adjustment of Timing Belt

12. ADJUSTMENT OF FG HEAD GAP

Equipment Required:
Fine Adjustment Screwdriver VFK0136
Specification: 0.12 ± 0.02mm

1. Remove 2 screws (A) and thrust angle unit, then remove the sub plate, 5 screws (B) and stator unit.

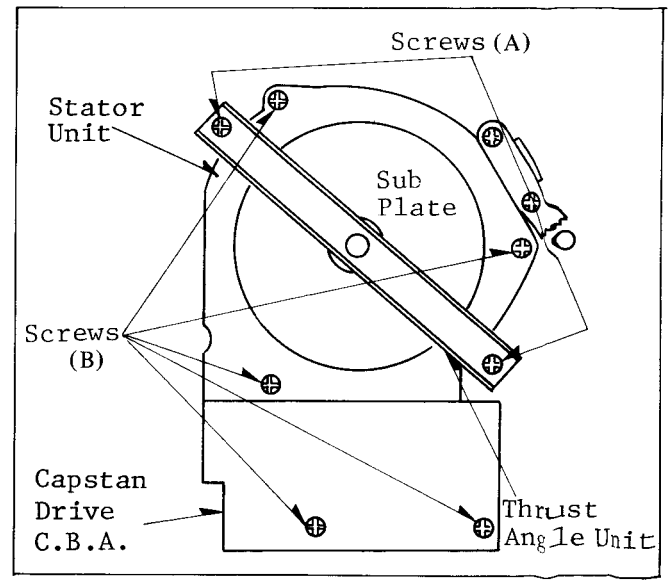

Fig. M38. Adjustment of F.G. Head Gap-(1)

2. Slightly loosen the 2 screws (C) and set the fine adjustment screwdriver into the hole (D).
   Turn screwdriver counterclockwise until the FG head touches the rotor and just slightly turn it clockwise so the gap becomes as specified.

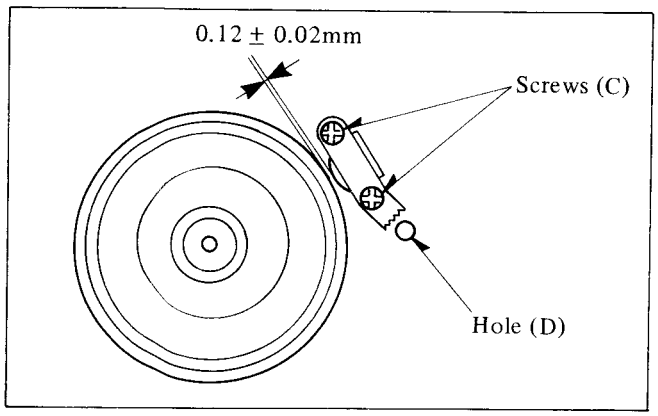

Fig. M36. Adjustment of F.G. Head Gap–(2)

c.f.
   Instead of this method, the cover page of this volume can be alternative because the thickness is approx. 0.12mm.

Notes:
1. Do not touch the circumferential surface of rotor with any tool, and keep any magnetizable material away from the rotor magnet.
2. When reinstalling the stator unit, install it concentrically with boss of rotor.

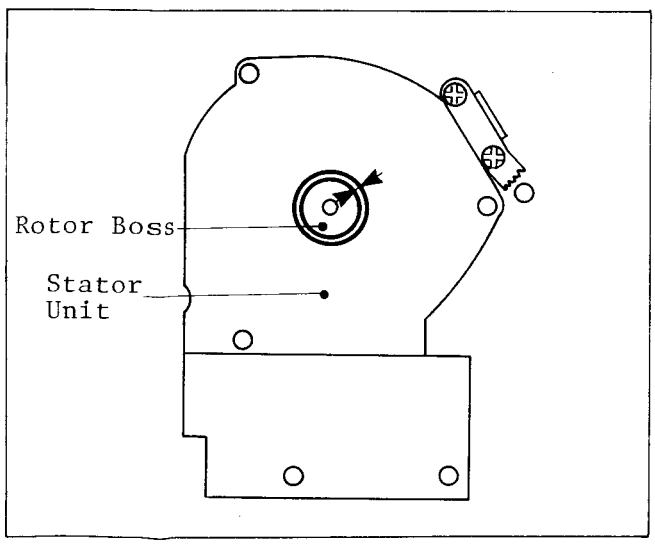

Fig. M40. Adjustment of F.G. Head Gap–(3)

13. CONFIRMATION/ADJUSTMENT OF THRUST GAP

Equipment Required:
Reel Table Height Gauge VFK0190
Specification: 0.01 ∿ 0.10mm

1. Place the height gauge on the thrust angle, and set the gauge to zero "0".
2. Next, push the capstan shaft by your finger, and confirm the thrust gap.
3. If the gap is out of specification, then adjust the thrust boss by turning it clockwise or counterclockwise.

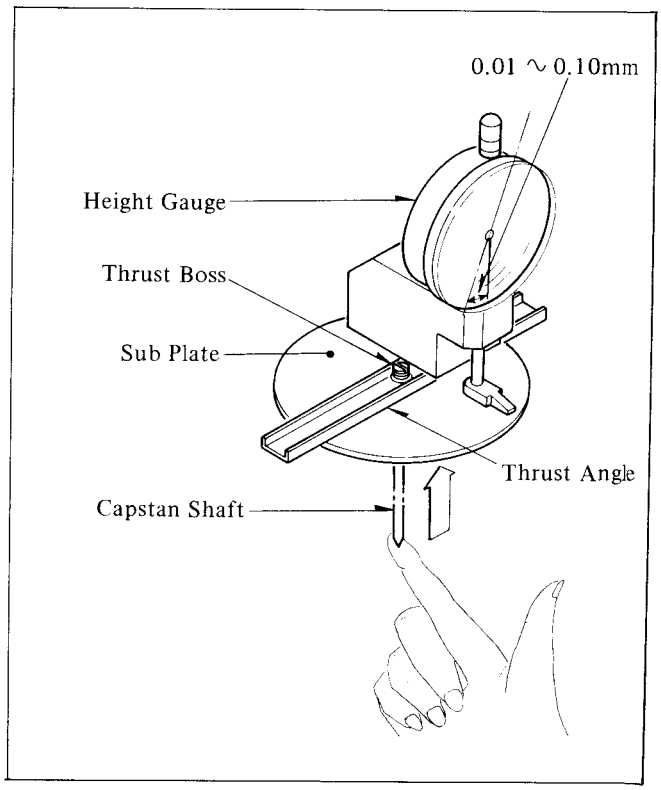

Fig. M41. Confirmation/Adjustment of Thrust Gap–(1)

14. ASSEMBLY AND ADJUSTMENT OF GEARS AND RODS

1. Install the supply and take-up loading arm units so that the projection (A) on the take-up loading gear aligns with the delta "Δ" mark (B) on the supply loading gear.
   Then install the 2 retaining rings.
   Ensure that the loading arm units is still in the fully unloaded condition.

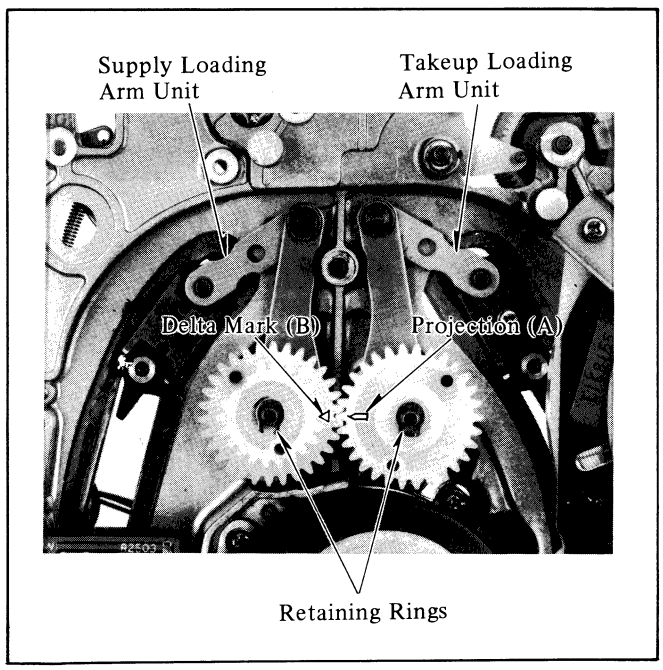

Fig. M42. Assembly and Adjustment of Gears and Rods–(1)

Note:
Pay attention that the washers are remaining under the loading gears.

2. Install the sector gear (II). Next install the sector gear (III) so that the convex on the sector gear (III) fits in with the concave on the sector gear (II).
   Then install the retaining ring.

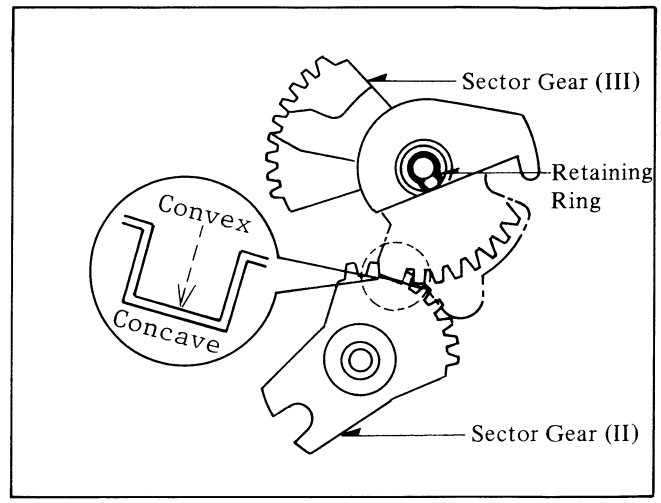

Fig. M43. Assembly and Adjustment of Gears and Rods–(2)

Next, align the delta "Δ" mark (C) on the sector gear (III), rib (D) on the sector gear (II) and the shaft (E) as they are on one line.

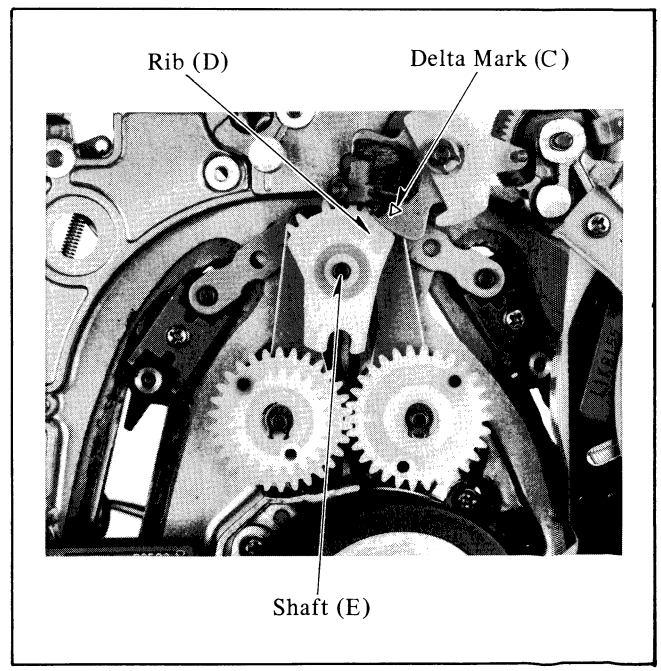

Fig. M44. Assembly and Adjustment of Gears and Rods–(3)

Then install the sector gear (I) so that the hole (F) on the sector gear (I) aligns with the projection (G) on the supply loading gear.
Then install the retaining ring.

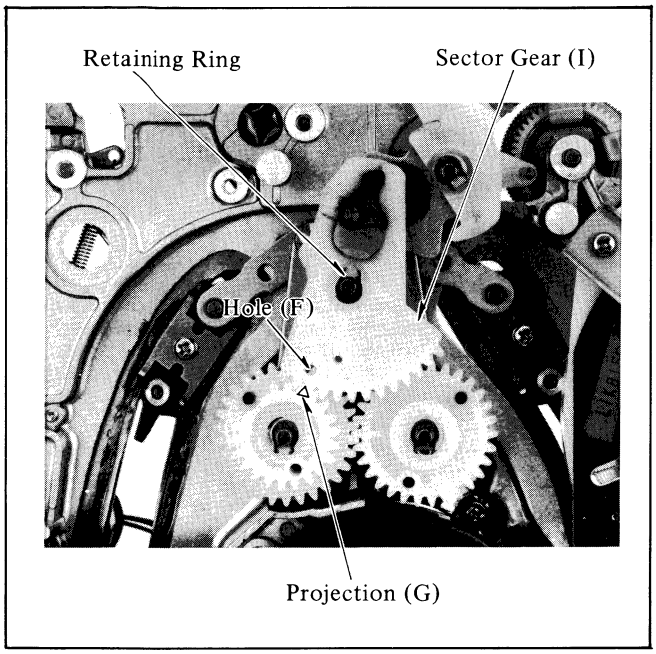

Fig. M45. Assembly and Adjustment of Gears and Rods–(4)

3. Install the sub cam gear so that the hole on gear meets the hole on the chassis.

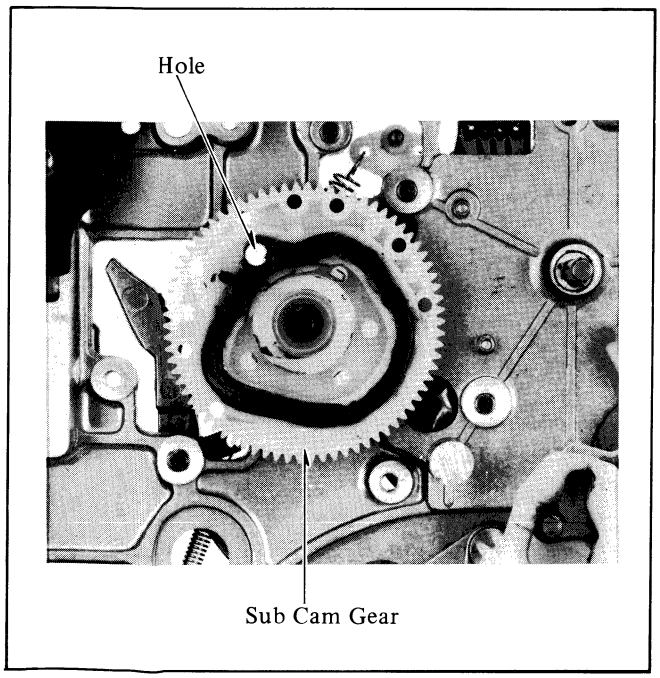

Fig. M46. Assembly and Adjustment of Gears and Rods–(5)

4. Install the 4 washers.
And install the sub rod unit so that the pin on the sub rod unit fits into the sub cam gear.

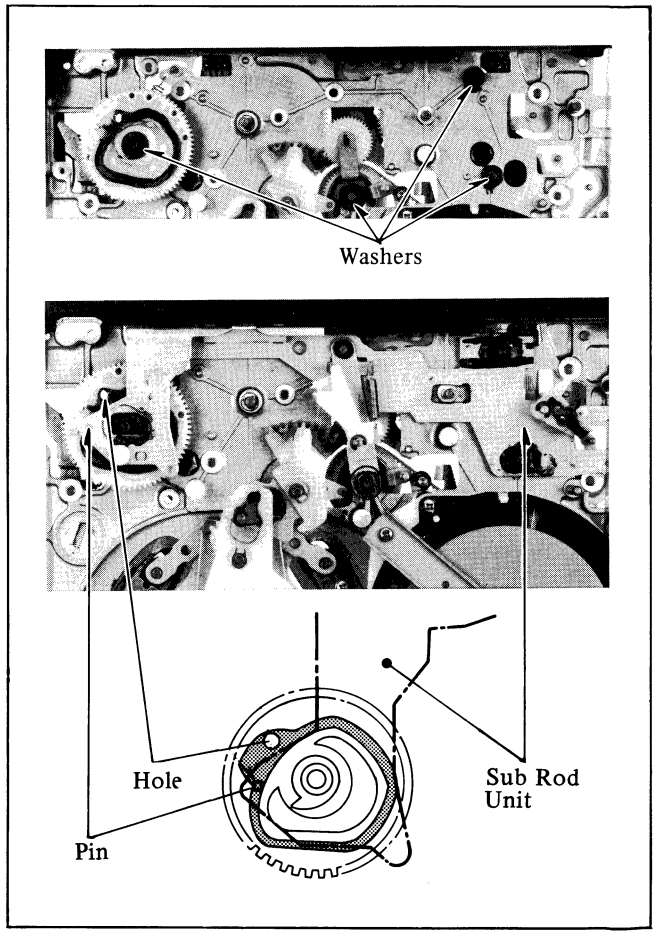

Fig. M47. Assembly and Adjustment of Gears and Rods–(6)

Then install the 4 washers, 2 retainings and 2 springs (H).

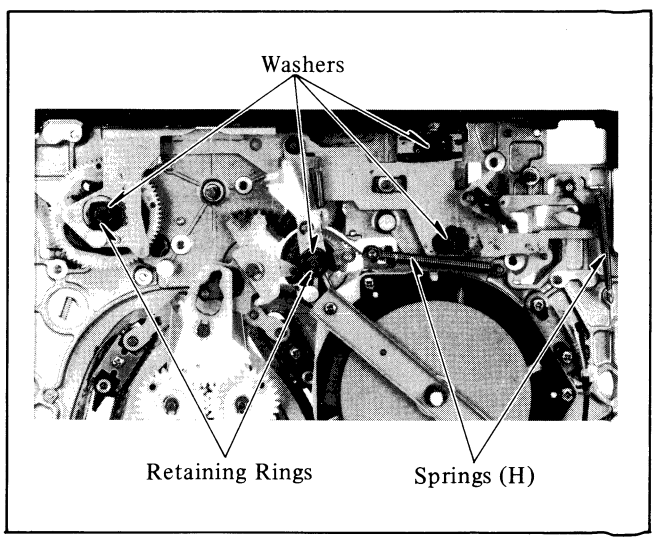

Fig. M48. Assembly and Adjustment of Gears and Rods–(7)

5. Confirm the sub cam gear is keeping the condition described in step 3. Then, install the main cam gear so that the hole (J) on the main cam gear aligns with the hole (K) on the sub cam gear.
And install the washer.

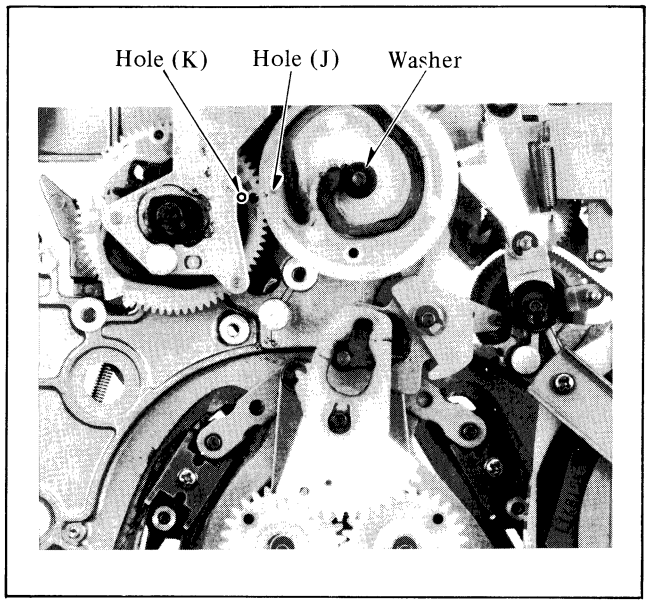

Fig. M49. Assembly and Adjustment of Gears and Rods–(8)

6. Install the main rod unit so that the pin (L) on the main rod unit fits into the part (M) on the sub rod unit.
Then install 3 washers and 4 retaining rings.

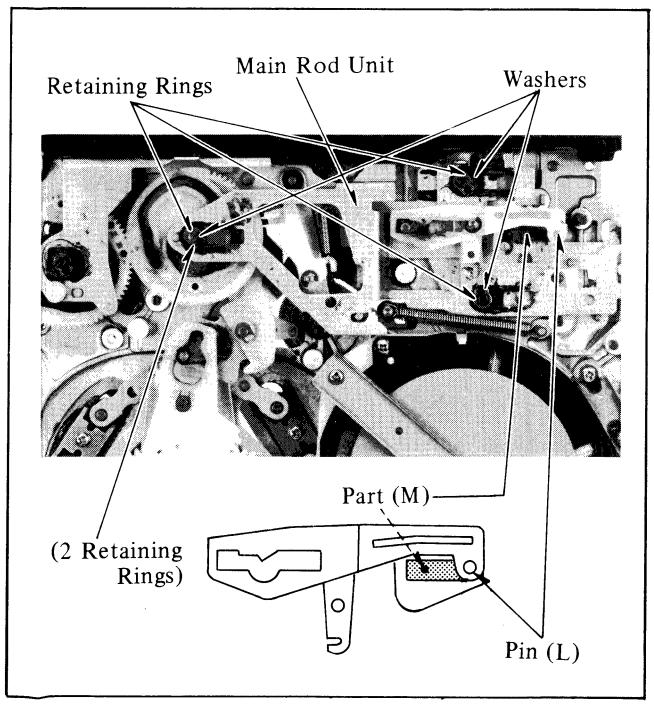

Fig. M50. Assembly and Adjustment of Gears and Rods–(9)

7. Confirm the sub cam gear is keeping the condition described in step 3. Then, install the eject stopper unit, screw (N), spring (P), eject kick lever unit, retaining ring and spring (Q).

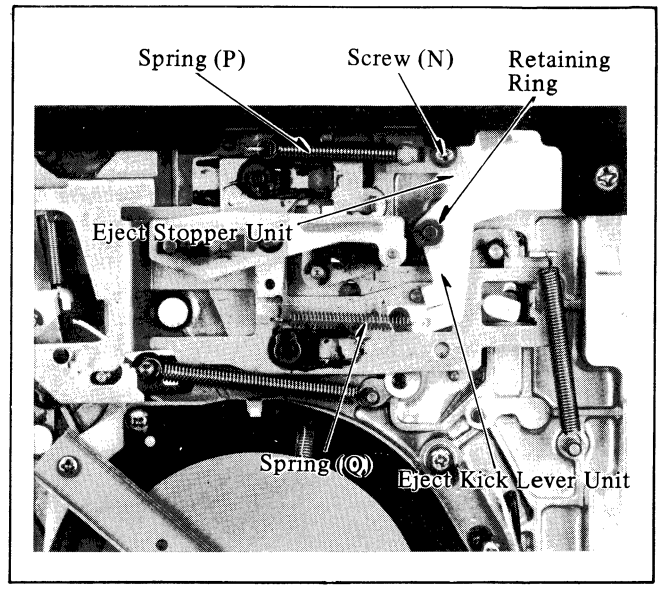

Fig. M51. Assembly and Adjustment of Gears and Rods–(10)

Note:
Do not transform the springs when installing them.

8. Confirm the sub cam gear is keeping the condition described in step 3. Rotate the gear on the rotary switch so that it becomes click (detent) position, then install the switch with 2 screws (R).

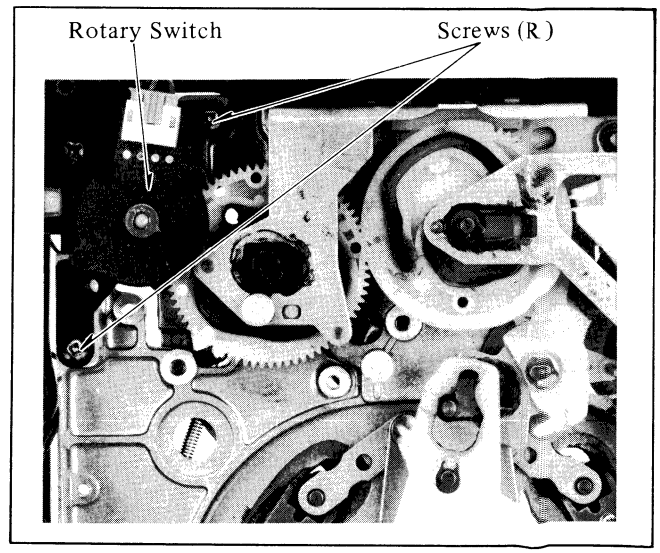

Fig. M52. Assembly and Adjustment of Gears and Rods–(11)

Note:
There is one click point per 4 rotations.

9. Rotate the sub cam gear counter-clockwise by your finger and make short loading.
   Then rotate it clockwise till the deck becomes the STOP condition.
   Then, install the loading motor with 3 screws (S) and connect the connector.

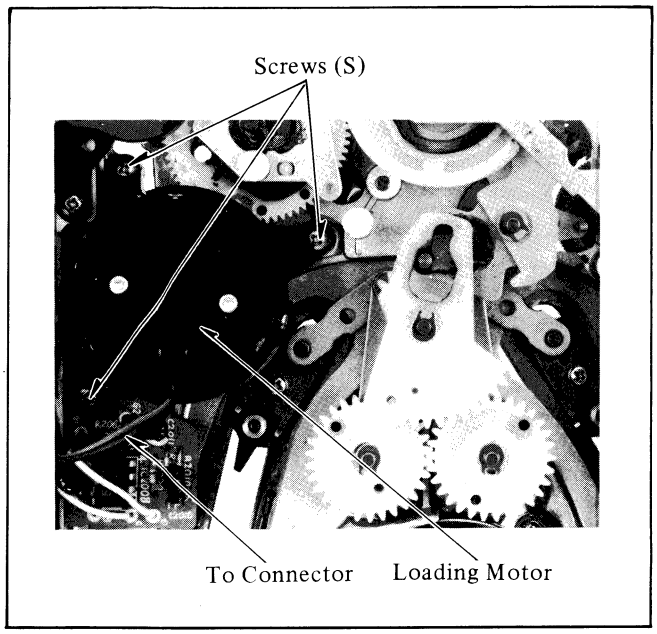

Fig. M53. Assembly and Adjustment of Gears and Rods–(12)

15. POSITION ADJUSTMENT OF CASSETTE UP HOLDER

Equipment Required:
Cassette Holder Fixture VFK0240

1. Supply power to the deck and make EJECT condition. Then turn power off.
2. Remove 2 screws (A) and loosen 4 screws (B).
3. Insert the fixture and push it all the way in until it touches the tabs on the cassette holder.
   Hold the fixture and cassette holder together with your hand, then slowly lower it while watching all holes and cut-outs until the cassette holder latches.
4. Press the center portion of the fixture and adjust the position so as to clear the reels, then tighten 4 screws (B). And tighten 2 screws (A).
5. Supply power again and ensure smooth movement by repeatedly pressing down and ejecting the cassette holder.

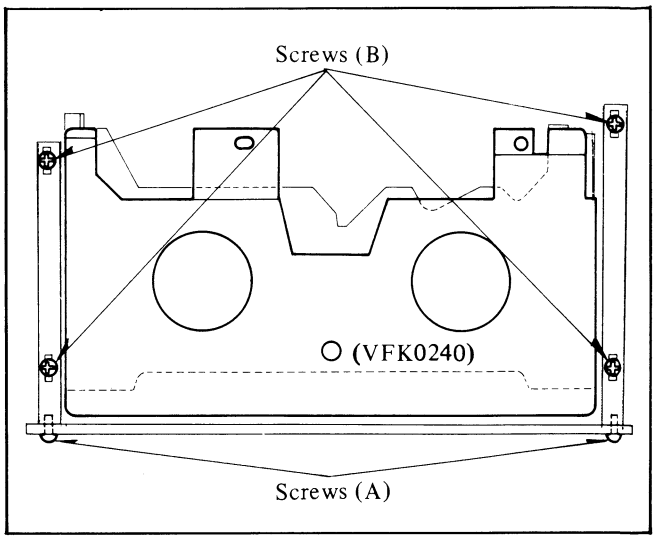

Fig. M54. Position Adjustment of Cassette Up Holder

16. ADJUSTMENT OF LEAF SWITCHES

Equipment Required:
Leaf Switch Adjustment Fixture
..... VFK0239
Fine Adjustment Screwdriver
..... VFK0136

1. Remove the Cassette Up Protector (plastic cover) on the leaf switches.
2. Set the fixture to the lock roller pin and lower edge of cassette up holder.
3. Slightly loosen screw (A) and insert the adjustment screwdriver to the hole (B).
4. Adjust the gap (C) so that the up lever and down lever just touches with leaf switches by turning adjustment screwdriver, then tighten screw (A).
5. Upon completion of adjustment, confirm the condition of leaf switches. (See Fig. M56.)

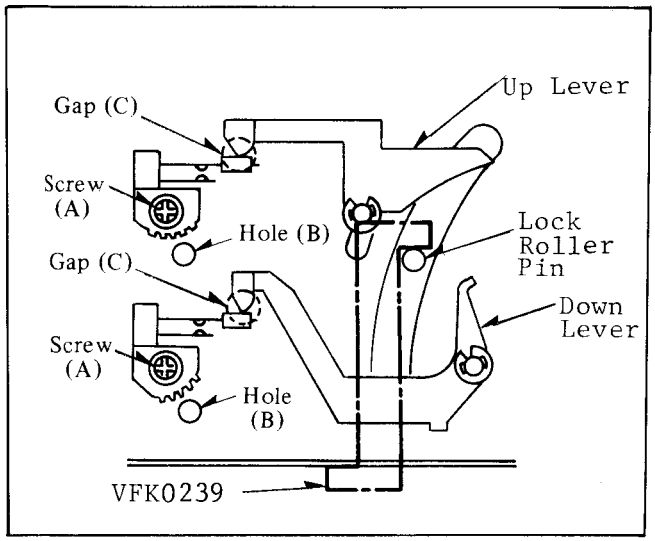

Fig. M55. Adjustment of Leaf Switches

Leaf Switches / Cassette Up Holder	Up Side Leaf Switch	Down Side Leaf Switch
UP	ON	ON
DOWN	OFF	ON

Fig. M56. Confirmation of Leat Switch

17. POSITION ADJUSTMENT OF RECORDING SAFETY SWITCH

Equipment Required:
Cassette Holder Fixture VFK0240
Hex. Wrench (0.9mm) VFK0146

1. Place the fixture in place over the reel tables.
2. Insert the hex. wrench into the hex. screw. Turn hex. wrench in either direction till the switch closes.

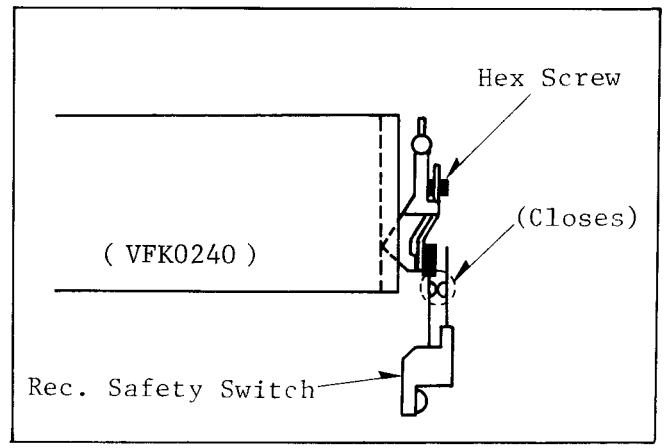

Fig. M57. Position Adjustment of Recording Safety Switch-(1)

Note:
When cassette with an erase tab is used, the switch closes, and without a tab, it opens.

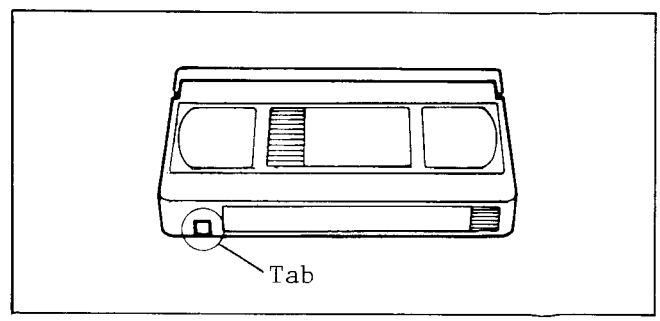

Fig. M58. Position Adjustment of Recording Safety Switch-(2)

Servicing Fixtures & Tools

VFM8100H3D VHS Alignment Tape

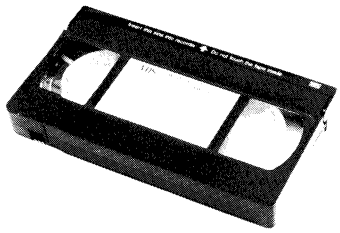

VFK0137 Post Adjustment Screwdriver

VFK0189 H-Position Adj Fixture

Back Tension Meter
(Tentelometer, Made in U.S.A.)

VFK0191 Post Adjustment Plate

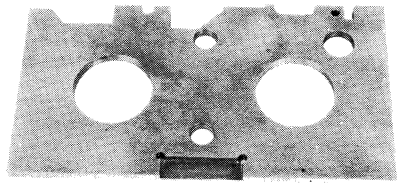

VFK0240 Cassette Holder Fixture

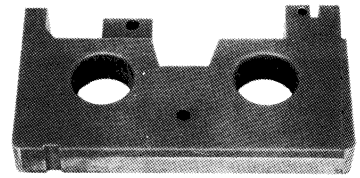

VFK0133
VFK0180 Dial Torque Gauge (Plastic Clamper Only)

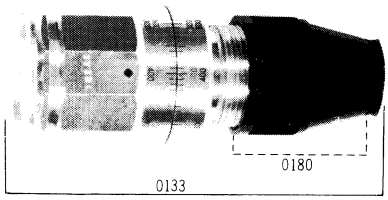

VFK0190 Reel Table Height Fixture

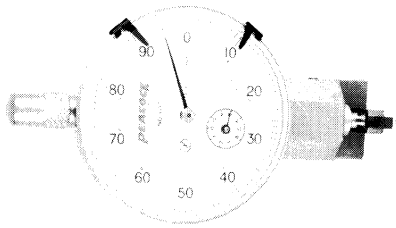

VFK0248
VFK0249 Solder Iron Transformer

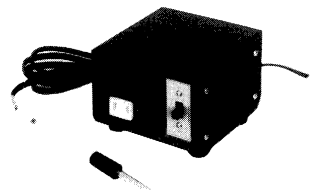

VFK0134 Adaptor for VFK0133

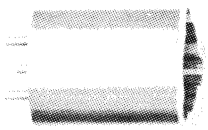

VFK0241 Tension Post Adj. Plate

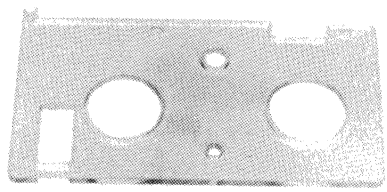

VFK27 Head Cleaning Stick

VFK0239 Leaf Switch Adj. Fixture

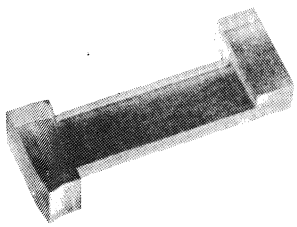

VFK0144 Retaining Ring Remover (3mmφ)

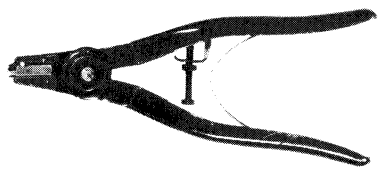

MOR265 Morlytone Grease

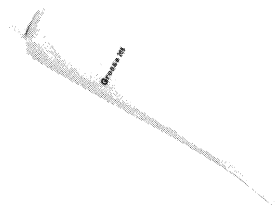

VFK0136 Fine Adjustment Screwdriver (3mmφ)

VFK0146 Hex. Wrench (0.9mm)
VFK76 Hex. Wrench (1.5mm)

VFK66 Fan-type Tension Gauge

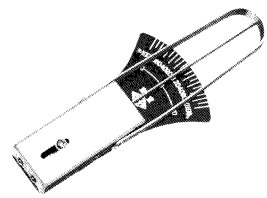

ELECTRICAL ADJUSTMENT PROCEDURES

This section provides complete electrical adjustment procedures which may be required for electric circuits of portable VHS video cassette recorder.

1. TEST EQUIPMENT

To perform the electrical adjustments completely, the following equipment is required.

1. DVM (Digital Volt Meter)
   Voltage Range: 0.001 - 50V
2. Dual-trace Oscilloscope
   Voltage Range : 0.05 - 50V/Div.
   Frequency Range: DC - 10MHz
   Probes: 10:1, 1:1
3. Frequency Counter
   Frequency Range: 0 - 10MHz
4. Signal Generator
   Sinewave: 0 - 10MHz
5. Sweep Generator
   Frequency Range: 0 - 10MHz
6. Color TV Receiver or Monitor
7. Plastic Tip Driver
8. VHS Alignment Tape
   VFM8100H3D

2. ADJUSTMENT PROCEDURES

Note: Components and Test Points in each section are series numbers. But for, easy alignment only the last numbers are used on P.C. Board.

These adjustment procedures consist of the following sections.

	SERIES
1. A.V.R. Section	1000
2. System Control Section	6000
3. Servo Section	2000
4. Audio Section	4000
5. Video Section .. Luminance .	3000
Chrominance	8000

2-1. A.V.R. Section

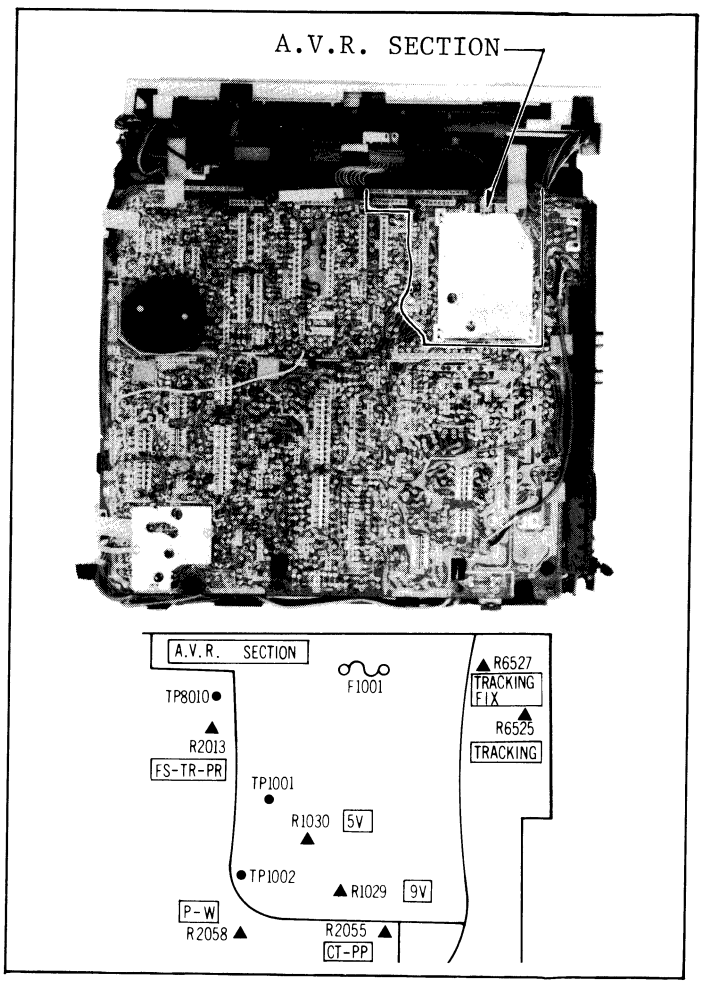

Fig. E1

2-1-1. +9V, +5V Regulator Adjustment

Test Points: TP1001, TP1002
Adjustments: R1029 (+9V), R1030 (+5V)

1. Connect the Multi-Connector to the deck so that +12V ± 0.5V is supplied to the deck.
2. Place the deck in PLAY mode.
3. Connect the DVM to TP1001 on the A.V.R. Section .
4. Adjust the +9V ADJ. (R1029) on the same section so that the voltage at TP1001 is 9.1 ± 0.1V DC. Remove the DVM.
5. Connect the DVM to TP1002 on the same section.
6. Adjust the +5V ADJ. (R1030) on the same section so that the voltage at TP1002 is 5.1 ± 0.1V DC.
7. Remove the DVM.

2-2. System Control Section

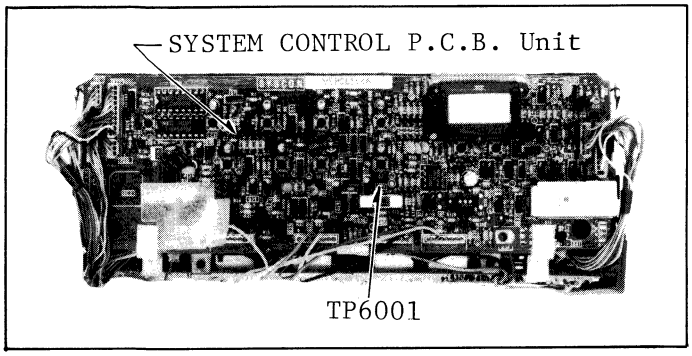

Fig. E2

2-2-1. Under Cut Voltage Adjustment

Test Point: TP6001
Adjustment: R6088 (UNDER CUT)

1. Do not supply any video and audio signals to the deck.
2. Do not connect the Multi-Connector to the deck.
3. Turn the UNDER CUT (R6088) on the System Control Board fully counter-clockwise from parts side.
4. Set the DC Voltage Regulator output voltage to +12 ± 0.1V DC, and this output voltage connects to the battery terminal of the deck.

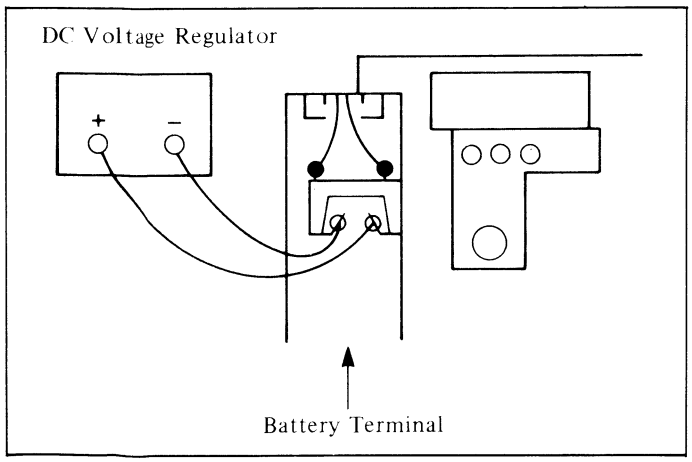

Fig. E3

5. Connect the scope to TP6001 on the same board and connect the DVM to the battery terminal of the deck.
6. Turn the power switch of the deck to on.
7. Insert a cassette and place the deck in Rec•Play mode.
8. Adjust the DC Voltage Regulator so that the voltage is 10.6 ± 0.1V DC.
9. Then, slowly turn the UNDER CUT (R6088) clockwise till the DC voltage change from High to Low at TP6001.
10. Confirm that the " " mark is indicated (flash) on the LCD counter for 3sec. Then the power switch of the deck is automatically turned OFF.

2-3. Servo Section

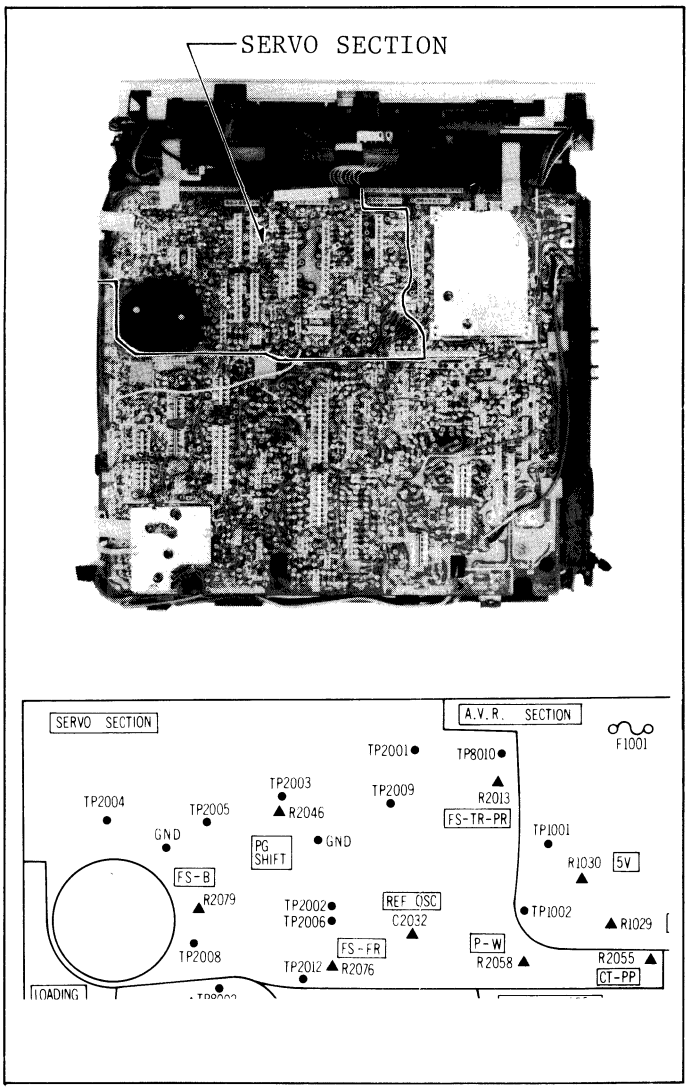

Fig. E4

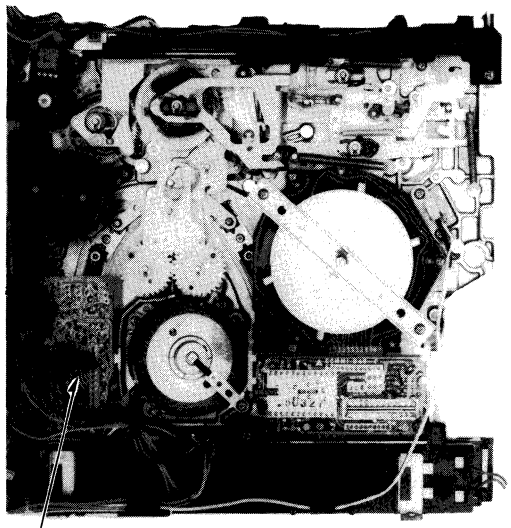

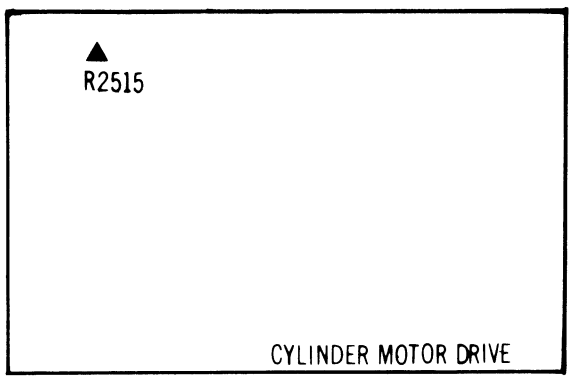

Fig. E5

2-3-1. 4.43MHz Crystal Oscillator Adjustment

Test Point: TP2006
Adjustment: C2032 (4.43MHz OSC)

1. Do not supply any video signal to the video input on the right side panel.
2. Supply +12V DC voltage, but do not use the Tuner unit.
3. Set the deck in STOP mode.
4. Connect the frequency counter to TP2006 on the Servo section.
5. Adjust the 4.43MHz OSC (C2032) on the same section so that the frequency is 4433619 ± 20Hz.

2-3-2. PG Shifter Adjustment

Test Points: TP2003, TP3008
Adjustment: R2046 (PG SHIFT)

1. Playback the alignment tape. (VFM8100H3D).
2. Connect the scope CH1 to TP2003 on the Servo section and CH2 to TP3008 on the Luminance section. Use TP2003 to trigger the scope.
3. Set the scope to the CHOP mode, then expand the V-Sync portion.
4. Adjust PG SHIFT (R2046) on the Serve section so that the head switching point becomes 6H ± 1H before the start of V-Sync portion.
5. Change the slope selector on the scope from "+" to "-" and make sure that the difference between rising edge and falling edge is less than 10μsec.

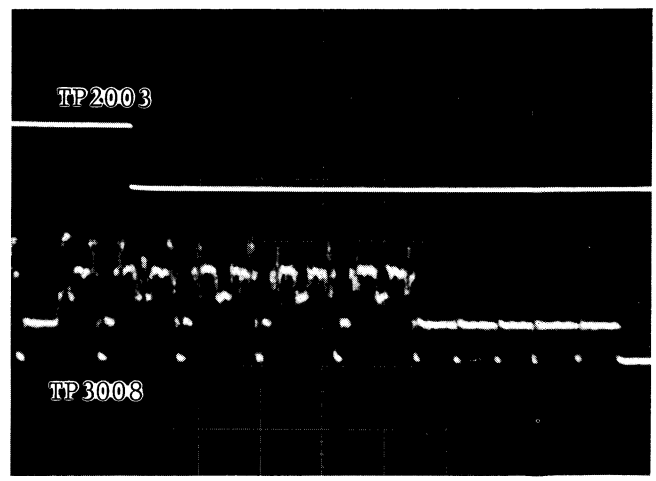

Fig. E6 (Up) 5V/50μsec.div.
(Down) 1V/50μsec.div.

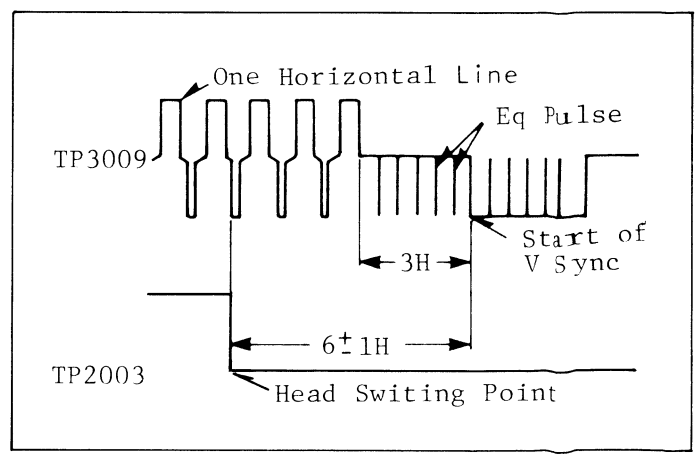

Fig. E7

2-3-3. Tracking Fix Adjustment

Test Points: TP2003, TP2005
Adjustment: R6526 (TRACKING FIX)

1. Supply video signal to the video input on the right side panel of the deck and make a recording for a few minutes.
2. Playback the just recorded portions, and connect the scope CH1 to TP2003 and CH2 to TP2005 both on the Servo section.
3. Set the scope to CHOP mode, and adjust TRACKING FIX (R6526) on the same section so that the "T" period becomes 0.4 ± 0.4msec.

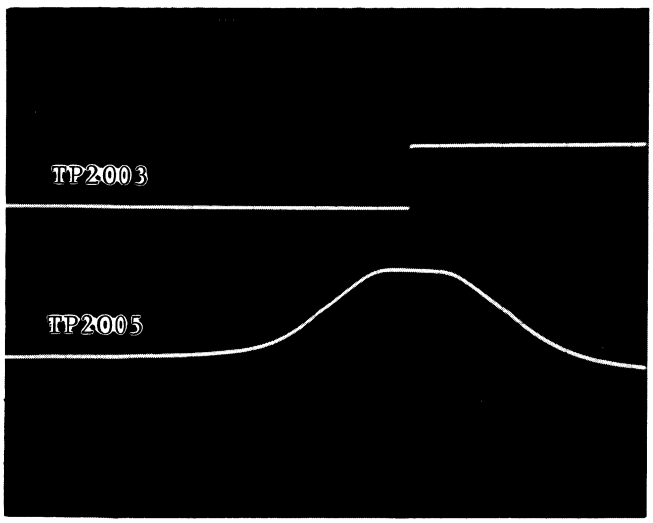

Fig. E8 (Up) 5V/0.1sec.div.
(Down) 1V/0.1sec.div.

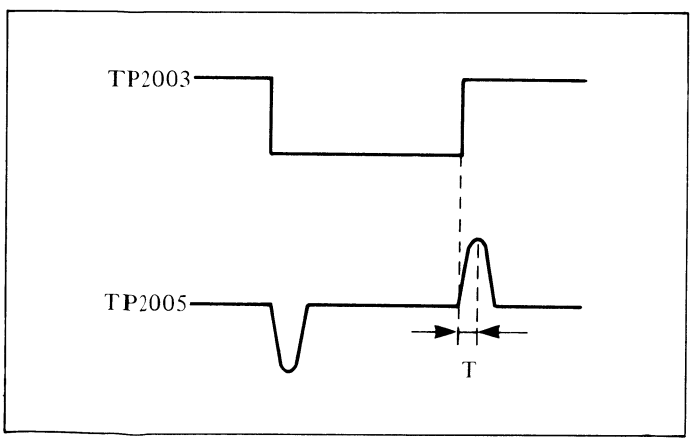

Fig. E9

2-3-4. Fine Slow Brake Adjustment

Test Points: TP2007, TP2008, TP2011
Adjustment: R2079 (F.S.B)

* Note Do not remove P23 connector on the System Control P.C.Board Unit.

1. Supply video signal to the video input on the right side panel of the deck, and make a recording for a few minutes.
2. Connect the scope CH1 to TP2008, CH2 to TP2011 and EXT TRIG to TP2007 on the Servo section.
3. Set the scope to CHOP mode, and playback the just recorded portions.
4. Press the Slow button and adjust F.S.B (R2079) on the same section so that the FG pulse is disappeared in "T" period, as shown below.

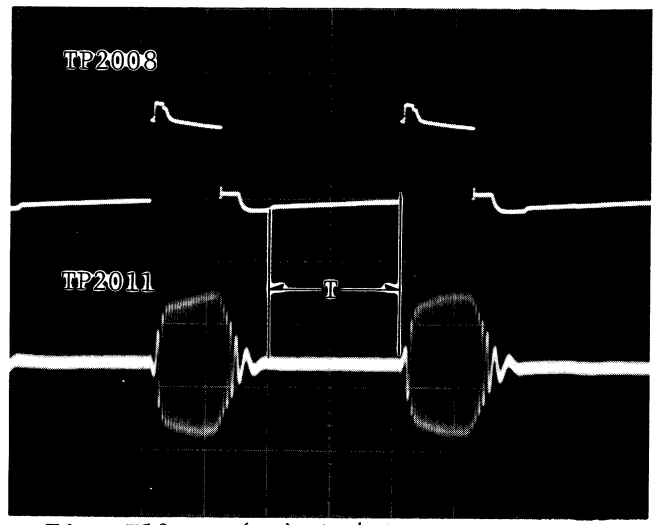

Fig. E10 (Up) 1V/50msec.div.
(Down) 50mV/50msec.div.

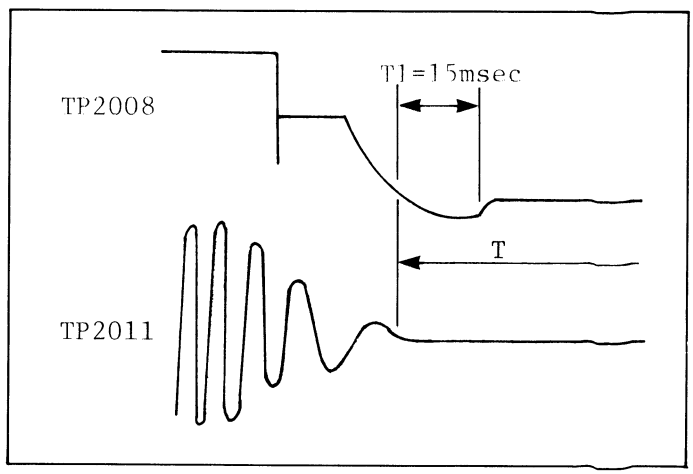

Fig. E11

2-3-5. Artificial V-Sync Adjustment

Test Points: TP2003, TP2012
Adjustments: R2055 (V-A), R2058 (V-B)

1. Supply video signal to the video input on the right side panel of the deck and make a recording for a new minutes.
2. Connect the scope CH1 to TP2003 and CH2 to TP2012 both on the Servo section.
3. Playback the just recorded portions and press the Pause button.
4. Adjust V-B (R2058) and V-A (R2055) both on the same section so that the waveforms are as shown in Fig. E12.
5. If V-dancing is appeared on the TV monitor after adjustment, then slowly turn the R2055 till the V-dancing is disappeared.

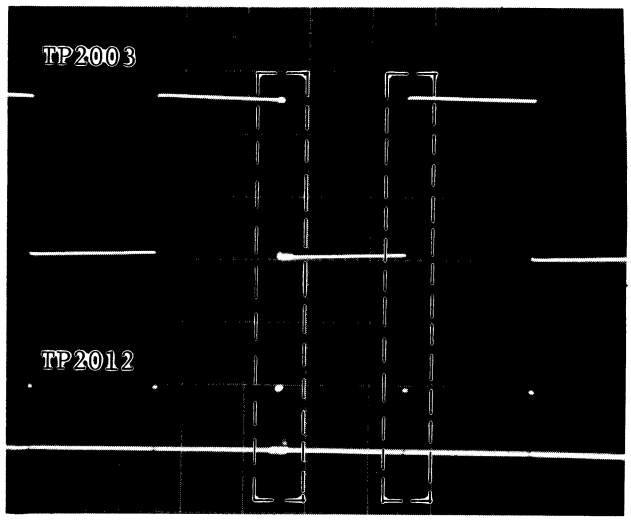

Fig. E12 (Up) 2V/10msec.div.
(Down) 2V/10msec.div.

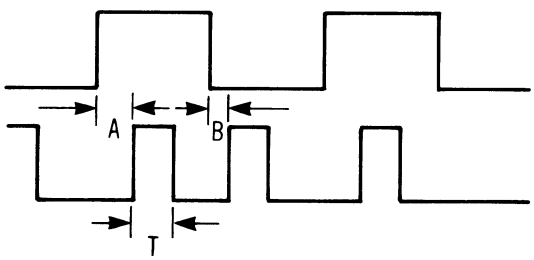

T = 420 ± 20μsec (R2058)
A = 185 ± 40μsec
B = A + 96 ± 10μsec (R2055)

Fig. E13

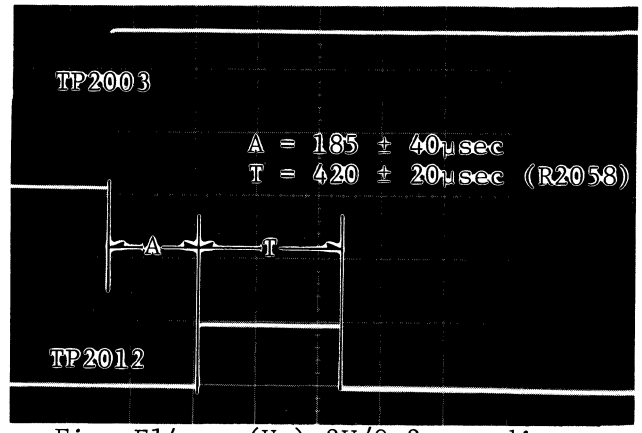

Fig. E14 (Up) 2V/0.2msec.div.
(Down) 2V/0.2msec.div.

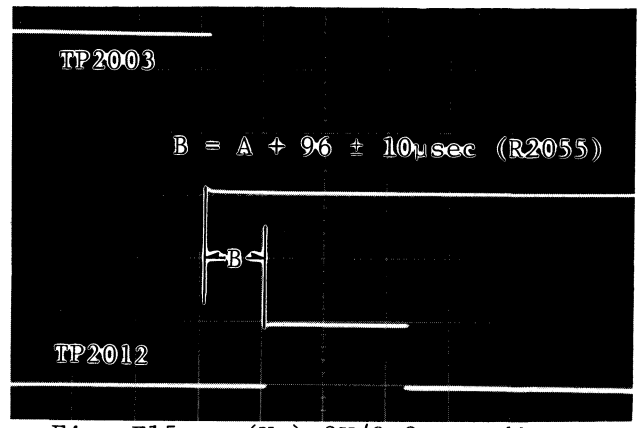

Fig. E15 (Up) 2V/0.2msec.div.
(Down) 2V/0.2msec.div.

2-3-6. Adjustments of Fine Slow Speed and Fine Slow Tracking

Test Point: Pin (17) of IC2001
Adjustments: R2013 (F.S. TR)
R2067 (F.S.S.)

1. Supply colour bar signal to the video input on the right side panel of the unit, and make a recording for a few minutes.
2. Playback the just recorded portions, and disconnect the P6023 connector P6023 for Slow Tracking VR on the System Control P.C.B.
3. Connect the frequency counter to pin (17) of IC2001 in the Servo section and press the SLOW button on the System Control P.C. Board.
4. Adjust F.S.S. (R2067) on the Servo section so that the indication of frequency counter becomes 492Hz ± 2Hz.
5. Again connect the connector P6023 for Slow Tracking VR and set the Slow Tracking VR on the front panel to center detent position.
6. Adjust F.S.TR (R2013) on the Servo section so that the noise band on the TV monitor becomes minimum.

2-4. Audio Section

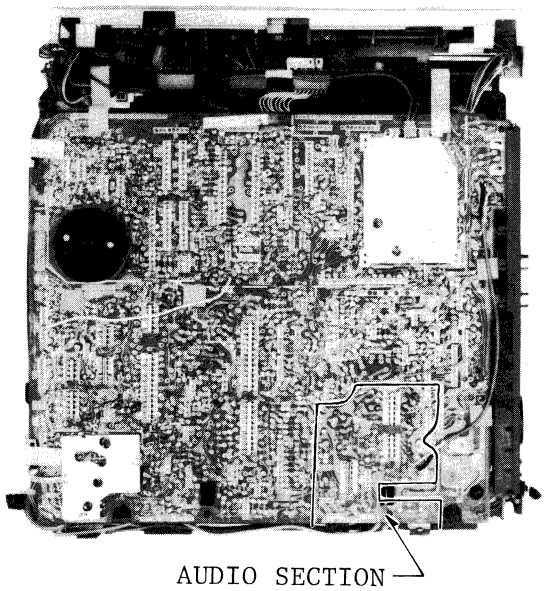

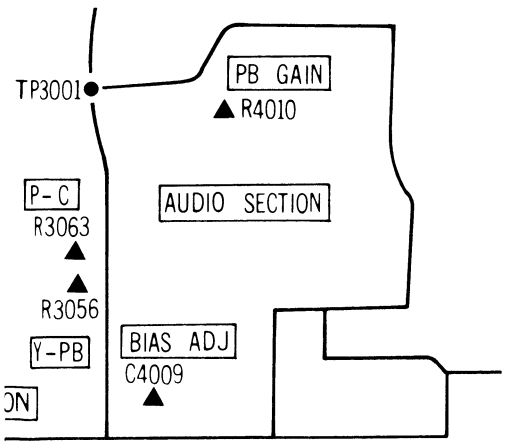

Fig. E16

2-4-1. Bias Current Adjustment

Test Points: A/C Head Test Pins
Adjustment: C4009 (BIAS CURR)

1. Do not supply any audio signal to the deck.
2. Connect the DVM between A/C Head Test Pins.
3. Place the deck in REC.PLAY mode, and adjust BIAS OSC (C4009) on the Audio section so that the indication of DVM is 4.1mVrms ± 0.1mVrms.

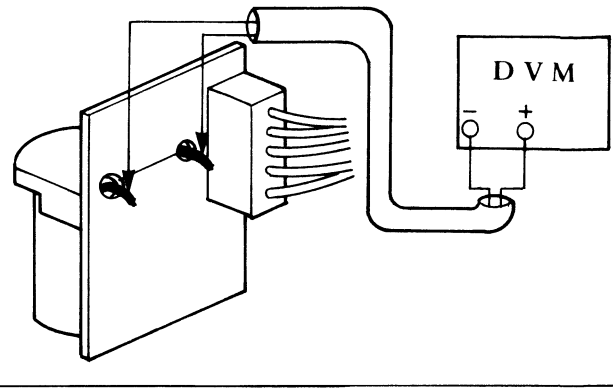

Fig. E17

2-4-2. Audio Playback Gain Adjustment

Test Point: LINE OUT connector
Adjustment: R4010 (P.B. GAIN)

1. Connect the Audio Connector (Supplied Accessory: VJP1164) as shown below.

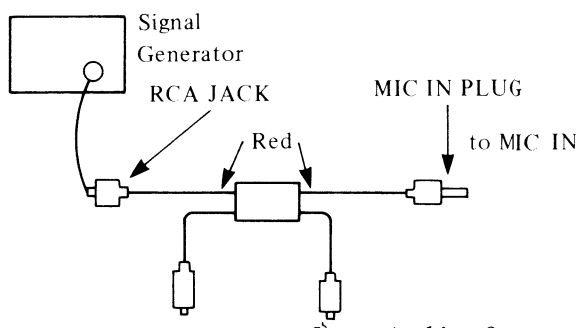

Fig. E18

2. Set the Sine Wave Generator output so that the indication of D.V.M. becomes 200mVrms in Rec.Play mode.
3. Make a recording for a few minutes.
4. Playback the just recorded portions, and adjust P.B. Gain (R4010) on the Audio section so that the level of audio line output is 200mVrms (565 mVp-p).

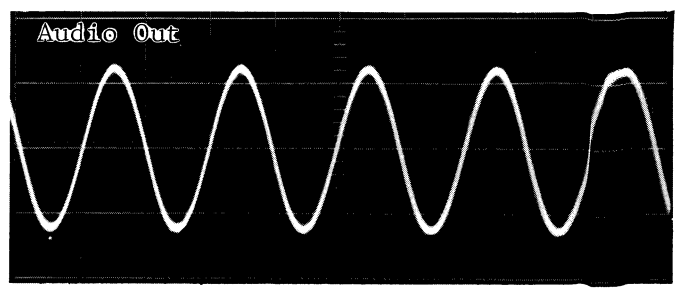

Fig. E19 0.2V/0.5msec.div.

2-5. Video Section

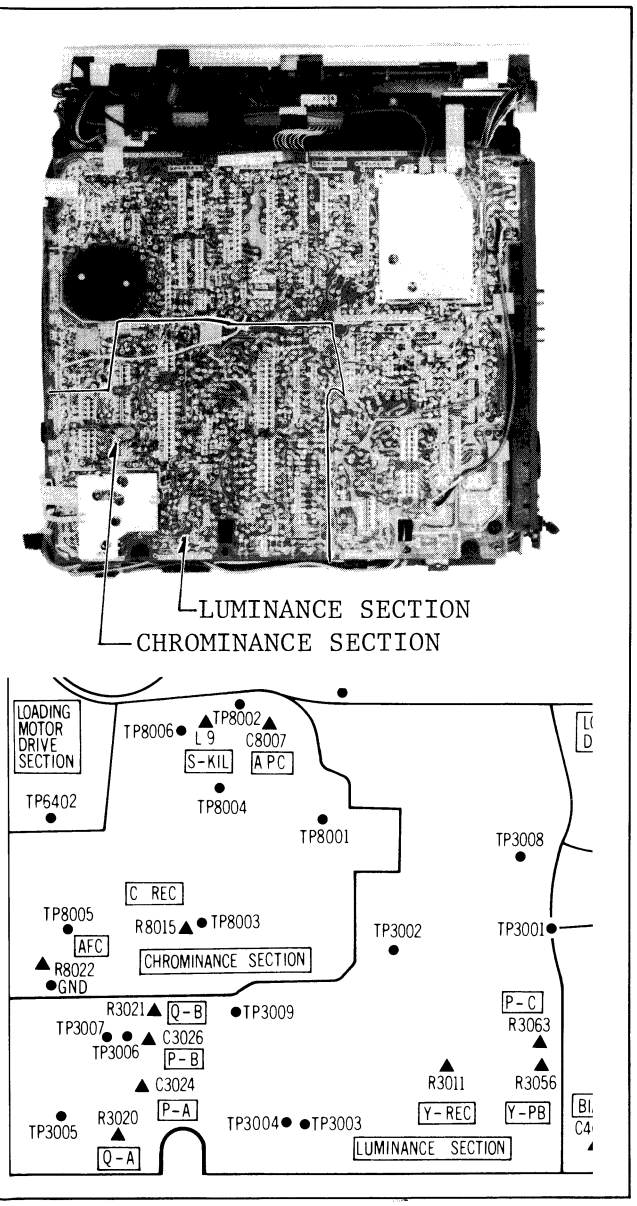

Fig. E20

2-5-1. AFC Adjustment

Test Point: TP8005
Adjustment: R8022 (AFC)

1. Do not supply any video signal to the deck, and place the deck in REC.PLAY mode.
2. Connect the frequency counter to TP8005 on the Chrominance section.
3. Adjust AFC (R8022) on the same section so that the frequency is 15.625 ± 0.05kHz.

2-5-2. APC Adjustment

Test Point: TP8001
Adjustment: C8007

1. Do not supply any video signal to the deck, and place the deck in REC.PLAY mode.
2. Connect the jumper wire between TP8002 and GND through the 10kΩ resistor. Connect the jumper wire between TP8004 and GND. There are on the Chrominance section.
3. Connect the frequency counter to TP8001 on the same section.
4. Adjust APC (C8007) on the same section so that the frequency is 4433619 ± 50Hz.

2-5-3. SECAM Killer Adjustment (For NV-100EG)

Test Point: TP8006
Adjustment: L8009 (SECAM KILL)

1. Supply SECAM colour bar signal to the video input on the right side panel of the deck, and place the deck in REC.PLAY mode.
2. Connect the scope to TP8006 on the Chrominance section.
3. Adjust SECAM KILL (L8009) on the same section so that the waveform at TP8006 becomes maximum.

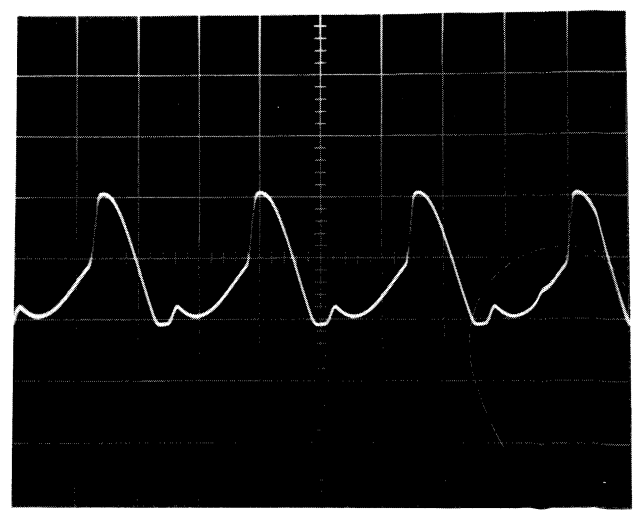

Fig. E21 1V/50μsec.div.

2-5-4. Chroma Rec Current Adjustment

Test Points: TP3006 (GND), TP3007 (HOT)
Adjustments: R3011 (REC FM)
R8015 (REC CHROMA)

1. Supply colour bar signal to the video input on the right side panel of the deck.
2. Place the deck in REC.PLAY mode.
3. Connect the scope between TP3006 (GND) and TP3007 (HOT) both on the Luminance section.
4. Turn the REC FM (R3011) fully counterclockwise, because REC FM signal is minimum.
5. Adjust REC CHROMA (R8015) on the Chrominance section so that the cyan portion of the chroma signal becomes 32 ± 2mVp-p.

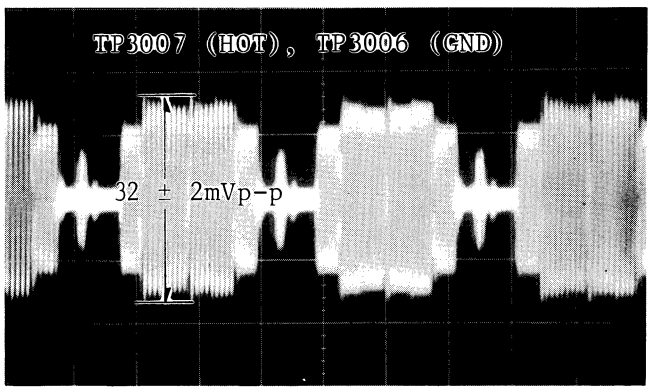

Fig. E22 10mV/20μsec.div.

6. Adjust REC FM (R3011) on the Chrominance section so that the Sync-Tip portion of FM signal becomes 150 ± 5mVp-p.

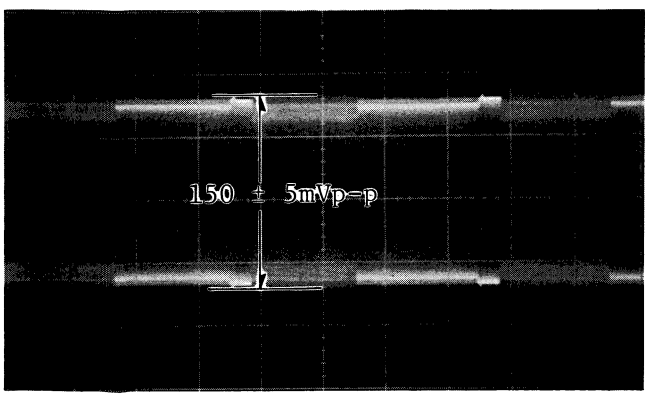

Fig. E23 50mV/5msec.div.

2-5-5. Head Amp Peak Adjustment

Test Point: TP3009
Adjustments: R3020 (Q-A), R3021 (Q-B)
C3024 (PEAK-A)
C3026 (PEAK-B)

1. Do not supply any video signal to the deck.
2. Turn the Q-A (R3020) and Q-B (R3021) both on the Luminance section to center.
3. Adjust the level of sweep generator to 28mV at 4.9MHz portion.
4. Connect the sweep generator to TP3005 on the Luminance section. And put the marker on 4.9MHz.
5. Cover the supply and takeup photo transistors with two pieces of black paper and place the unit in the PLAY/PAUSE mode without a tape.
6. Connect the scope to TP3009 on the same section.
7. Adjust PEAK-A (C3024) and PEAK-B (C3026) both on the same section so that the peaks on the scope becomes 4.9MHz portions.
8. Adjust R3020 and R3021 so that the CH A and CH B waveforms are balanced and 200mVp-p.

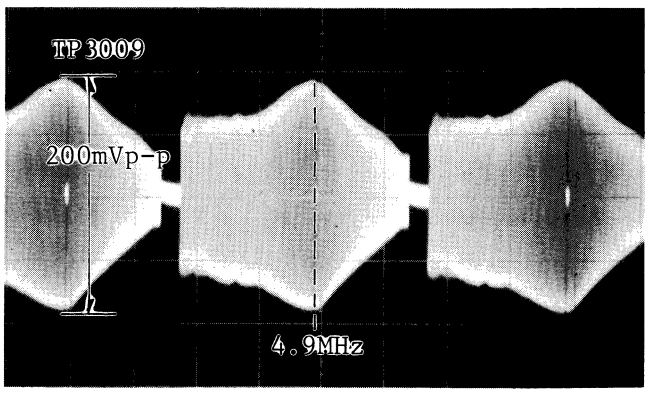

Fig. E24 50mV/5msec.div.

2-5-6. Frequency Response Adjustment

Test Points: TP3007 (HOT), TP3006 (GND)
TP3009
Adjustments; R3020 (Q-A), R3021 (Q-B)

1. Insert the cassette tape and place the deck in REC.PLAY mode.
2. Connect the jumper between TP3003 and GND both on the Luminance section.
3. Connect the scope between TP3006 (GND) and TP3007 (HOT) both on the same section.

4. Connect the sync-output of sweep generator to the video input on the right side panel of the deck, and connect the sweep signal output to TP3004 on the same section.
5. Put the marker of sweep output at 2MHz, 3.8MHz and 4.9MHz and set the output level of 3.8MHz portion for 150mVp-p on the scope.

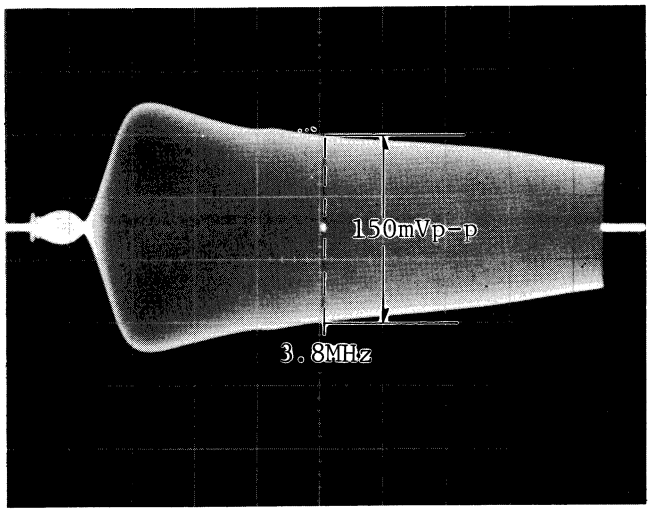

Fig. E25 50mV/2msec.div.

6. Remove the jumper wire, sweep generator and scope after few minutes passed.
7. Connect the scope to TP3009 on the same section.
8. Playback the just recorded portions, and adjust Q-A (R3020) and Q-B (R3021) both on the samesection so that the 2MHz portions and 4.9MHz portions are as shown below.

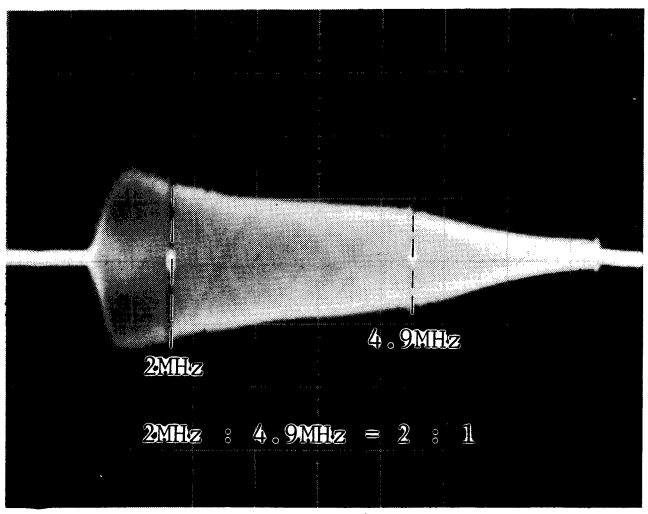

Fig. E26 50mV/2msec.div.

2-5-7. Playback Level Adjustment

Test Point: TP3008
Adjustments: R3063 (PICTURE)
R3056 (Y-PB)

1. Supply colour bar signal to the video input on the right side panel of the deck and make a recording for a few minutes.
2. Playback the just recorded portions and connect the 75Ω terminator to the video output of the deck.
3. Turn the PICTURE (R3063) on the Luminance section for center.
4. Connect the scope to TP3008 on the same section, and adjust Y-PB (R3056) on the same section so that the level of waveform is 2.0 ± 0.1 Vp-p.

LOCATION OF TEST POINT & CONTROLS

MAIN P.C.B. UNIT (VEP03137A/VEP03137B)

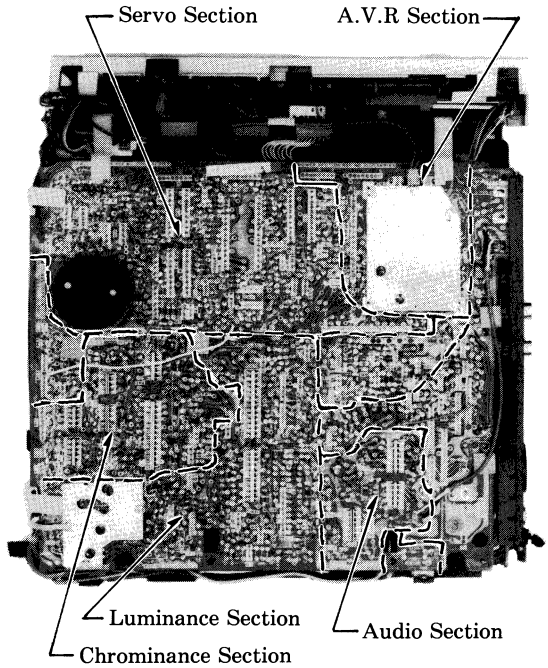

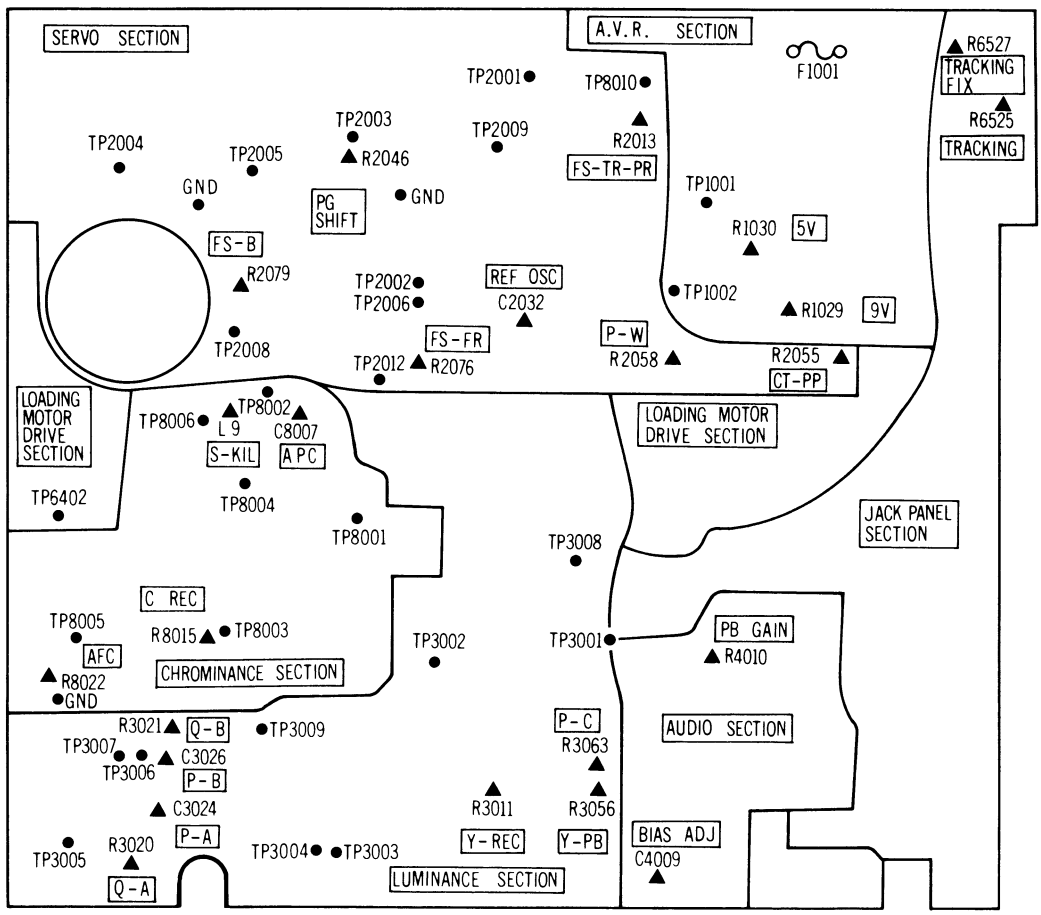

SYSTEM CONTROL P.C.B. UNIT (VEP06164A)

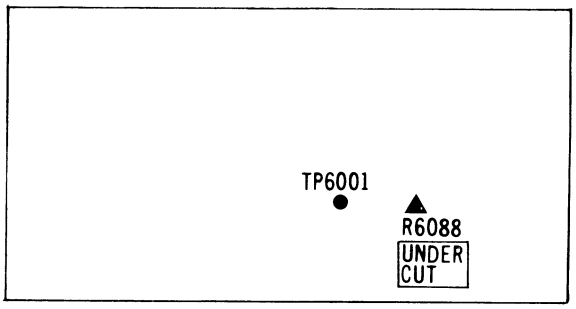

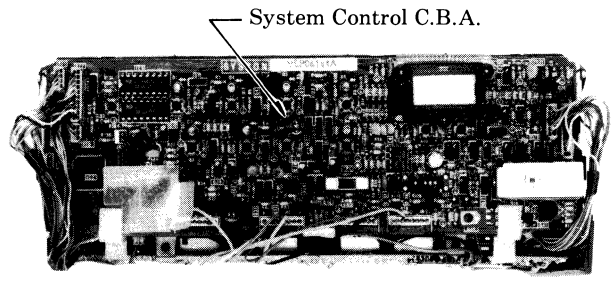

CYLINDER MOTOR DRIVE P.C.B. UNIT (VEP02148B)

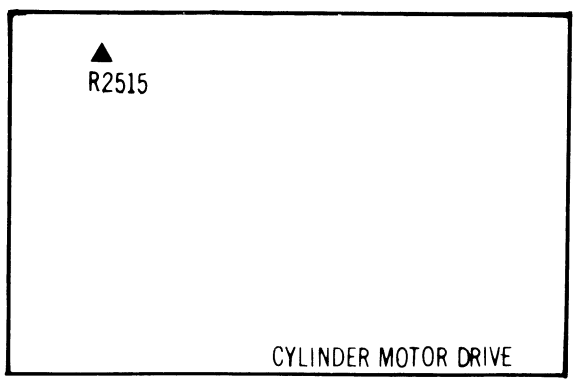

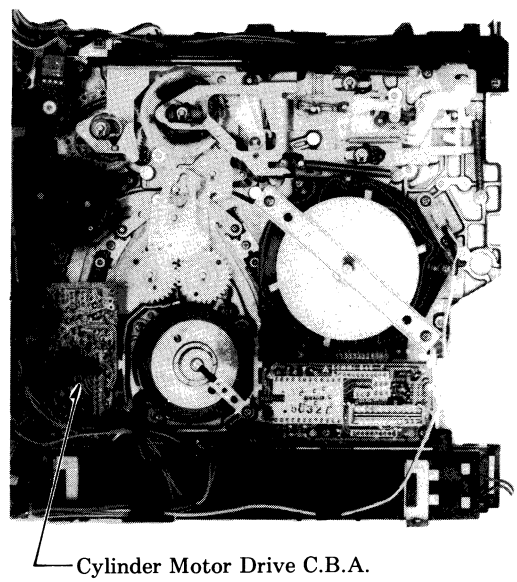

Panasonic

MATSUSHITA ELECTRIC

Printed in Japan

Panasonic

MATSUSHITA ELECTRIC

Printed in Japan

ORDER NO. VRD-8206-099

Service Manual

Portable Video Cassette Recorder

Vol. 3

Panasonic VHS

NV-100 -E -B -EG

Block Diagrams
Schematic Diagrams

SPECIFICATIONS

Power Source:	DC 12V
Power Consumption:	Approx. 6.7W at Play mode
Video Recording System:	2 rotary heads, helical scanning system
Tape Speed:	23.39mm/s
Tape Format:	Tape width 12.7mm high density tape
Record/Playback Time:	240 min. with NV-E240
FF/REW Time:	Less than 6.5 min. with NV-E180
VIDEO	
Television System:	CCIR: 625 lines, 50 fields PAL colour signal (PAL/D.D.R SECAM colour signal: NV-100EG only)
Modulation System:	Luminance: FM azimuth recording Colour signal: converted subcarrier phase shift recording
Input Level:	VIDEO IN (BNC): 1.0Vp-p, 75Ω unbalanced
Output Level:	VIDEO OUT (BNC): 1.0Vp-p, 75Ω unbalanced RF Modulated: UHF channel 36 (±4), 75Ω unbananced
AUDIO	
Input Level:	MIC IN (M3): −70dB, more than 600Ω unbalanced 10 pin input, Multi input: −20dB, 2.2kΩ unbalanced
Output Level:	LINE OUT (RCA): −6dB, 600Ω unbalanced Earphone: −10dB, 200Ω unbalanced
Audio Track:	1 track
Video Horizontal Resolution:	Colour: more than 240 lines
Signal-to-Noise Ratio:	Video: more than 40dB Audio: more than 43dB
Audio Frequency Response:	80Hz—10kHz
Operating Room Temperature:	0°C—40°C
Operating Humidity:	35%—80%
Weight:	3.8kg (with internal battery pack)
Dimensions:	236(W)×92(H)×242(D)mm
Standard Accessories:	1 pc. Video Cassette Tape 2 pcs. DIN-RF coaxial cable 1 pc. Audio Input Attenuator 1 pc. Earphone 1 pc. Carrying Case
Optional Accessories:	Video cassette tape: NV-E240 Approx. 344m, 240 min. NV-E180 Approx. 258m, 180 min. NV-E120 Approx. 174m, 120 min. NV-E90 Approx. 130m, 90 min. NV-E60 Approx. 88m, 60 min. NV-E30 Approx. 45m, 30 min. Battery Pack, LCS2012E Video Tuner/Timer Adaptor, NV-V10 AC Adaptor, NV-B11 Wireless Remote Controller, NV-A17 Wired Remote Controller, NV-A13 Car Battery Cord, NV-C12 Video Camera Microphone

Weight and dimensions shown are approximate.
Specifications are subject to change without notice.

Panasonic

Matsushita Electric Trading Co., Ltd.
P.O. Box 288, Central Osaka Japan

CONTENTS

SPECIFICATIONS ..... Cover
BLOCK DIAGRAM 3- 1
  OVERALL 3- 1
  A.V.R. 3- 2
  JACK PANEL 3- 3
  MODE BY MODE IC TIMING CHART 3- 4
  SYSTEM CONTROL 3- 5
  CHROMINANCE PROCESS 3- 6
  LUMINANCE PROCESS 3- 7
  SERVO 3- 8
  RF CONVERTER 3- 8
A.V.R. SECTION SCHEMATIC DIAGRAM 3- 9
JACK PANEL SECTION SCHEMATIC DIAGRAM 3-10
LOADING MOTOR DRIVE SECTION SCHEMATIC DIAGRAM 3-11
MAIN P.C.B. UNIT 3-11
AUDIO SECTION SCHEMATIC DIAGRAM 3-12
MAIN P.C.B. UNIT 3-12
LUMINANCE & CHROMINANCE SECTION SCHEMATIC DIAGRAM..... 3-13
SERVO SECTION SCHEMATIC DIAGRAM 3-14
CYLINDER MOTOR DRIVE SCHEMATIC DIAGRAM 3-14
CAPSTAN MOTOR DRIVE SCHEMATIC DIAGRAM 3-14
MAIN P.C.B. UNIT 3-15
CAPSTAN MOTOR DRIVE P.C.B. UNIT 3-15
CYLINDER MOTOR DRIVE P.C.B. UNIT 3-15
SYSTEM CONTROL CIRCUIT 3-16
RF CONVERTER UNIT (NV-100E/EG;ENC17553)..... 3-18
RF CONVERTER UNIT (NV-100B;ENC17554) 3-18
SMALL CIRCUIT BOARD 3-20
CIRCUIT BOARD LAYOUT 3-22
INTERCONNECTION SCHEMATIC DIAGRAM 3-23

OVERALL BLOCK DIAGRAM

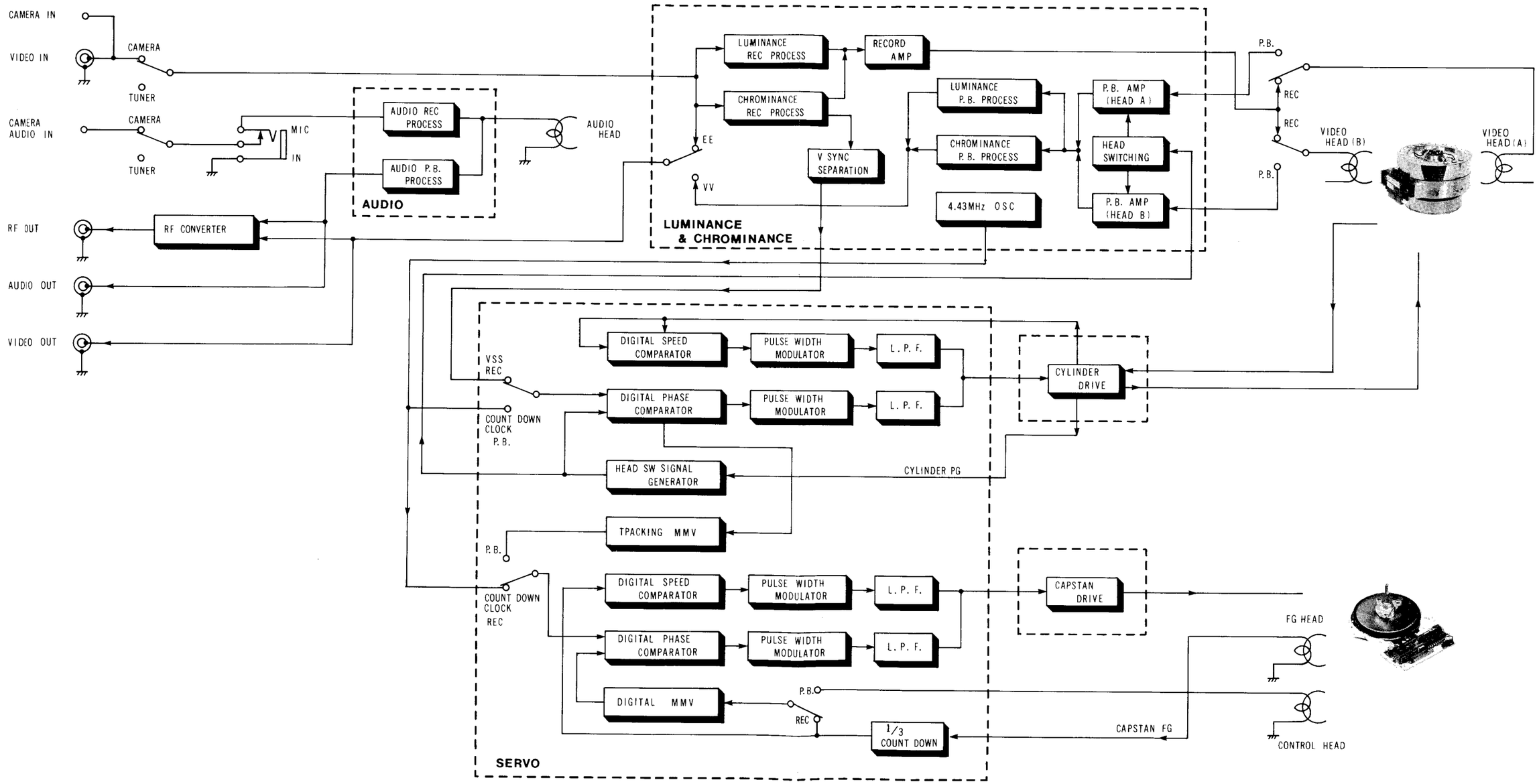

A.V.R. BLOCK DIAGRAM

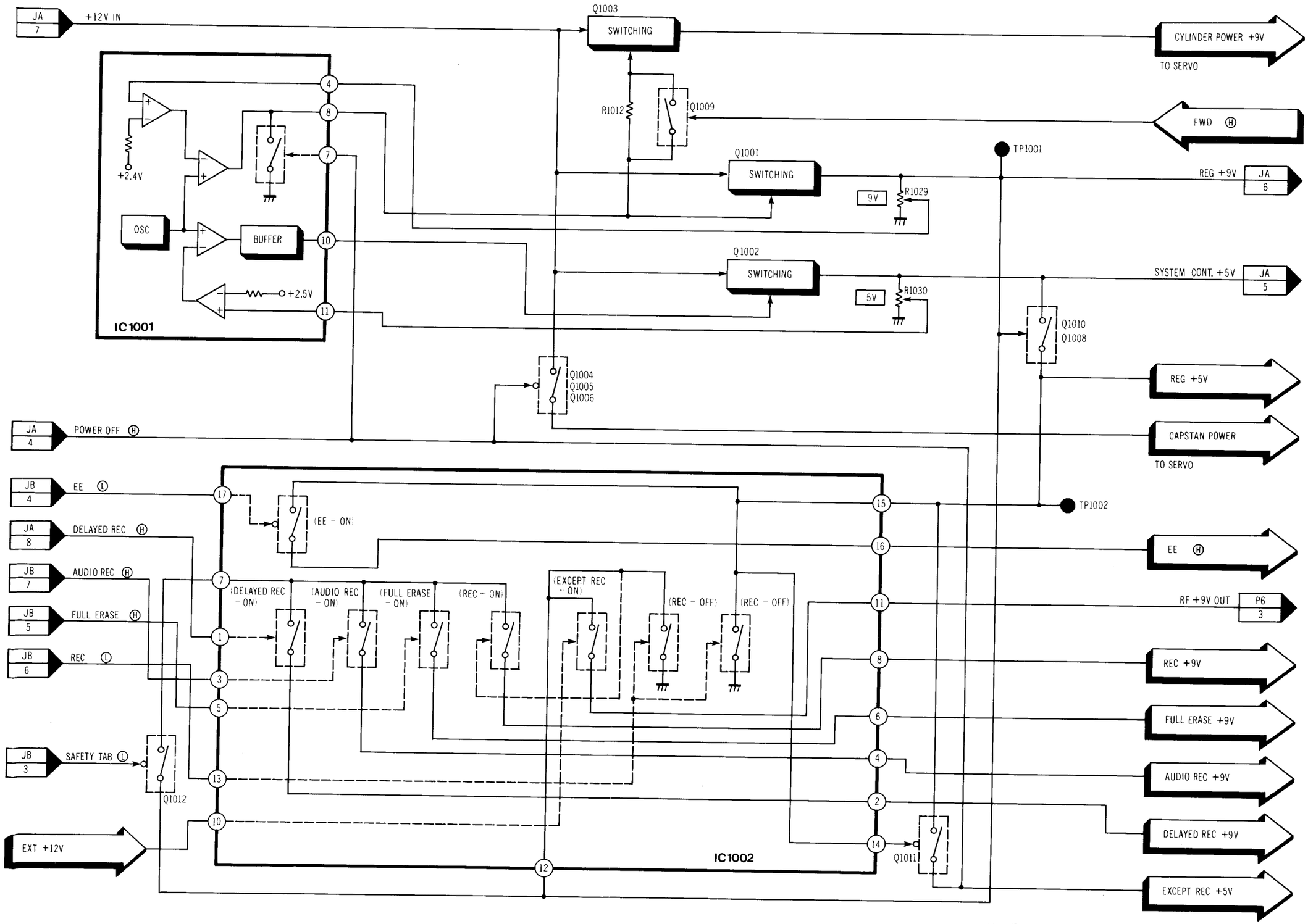

JACK PANEL BLOCK DIAGRAM

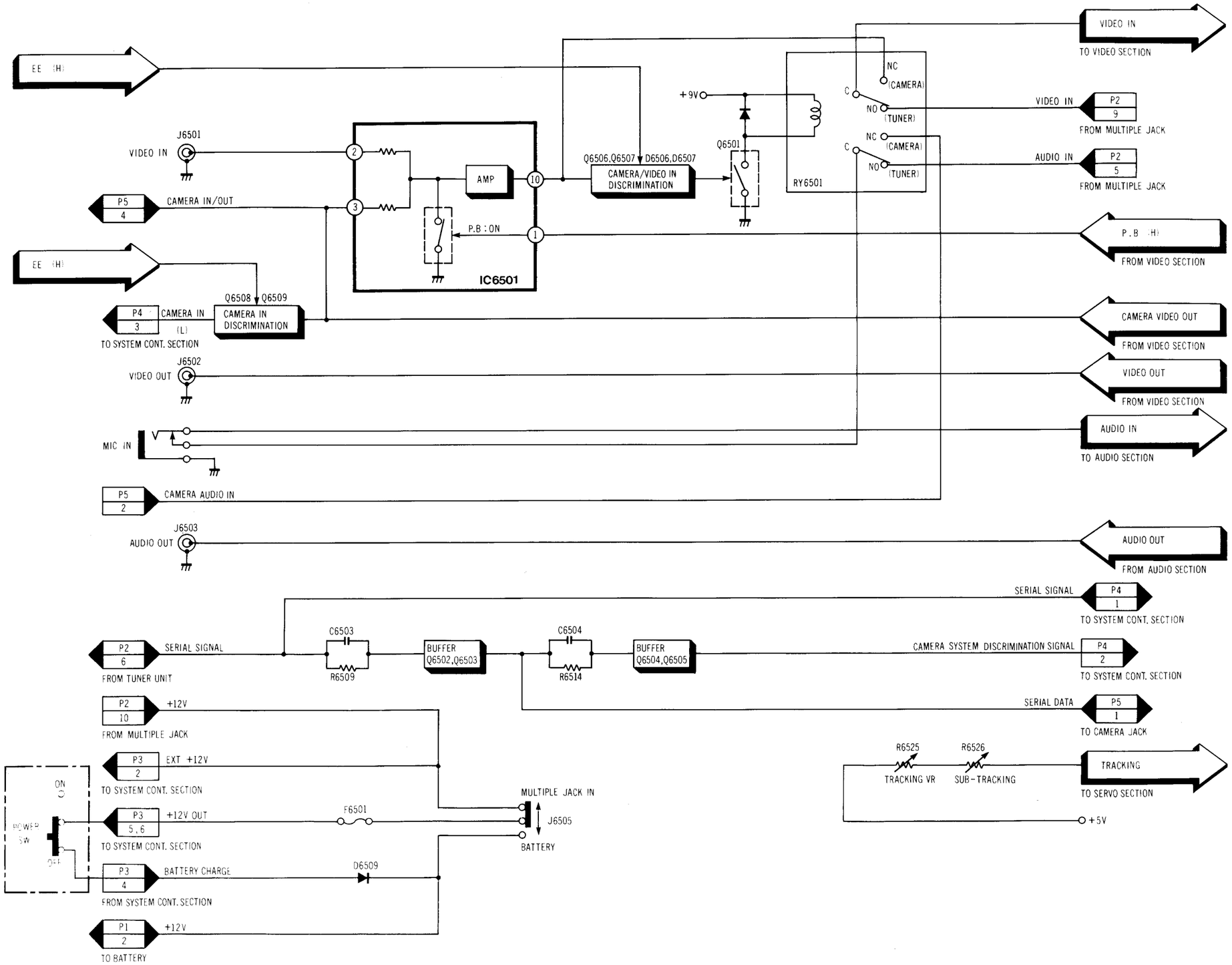

MODE BY MODE IC TIMING CHART

1. STOP → PLAY

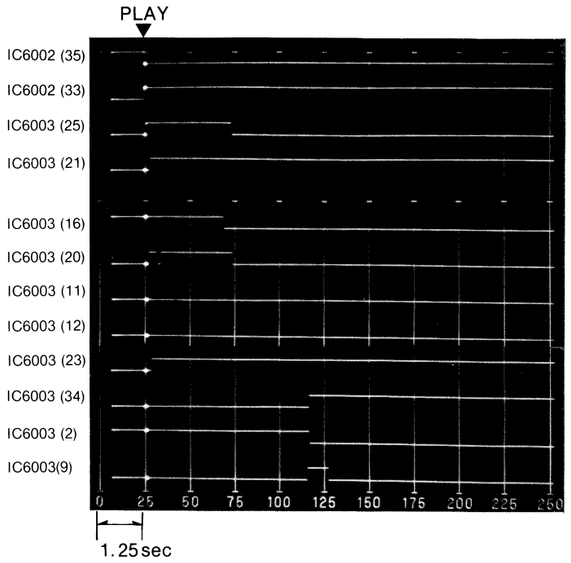

2. PLAY → STOP

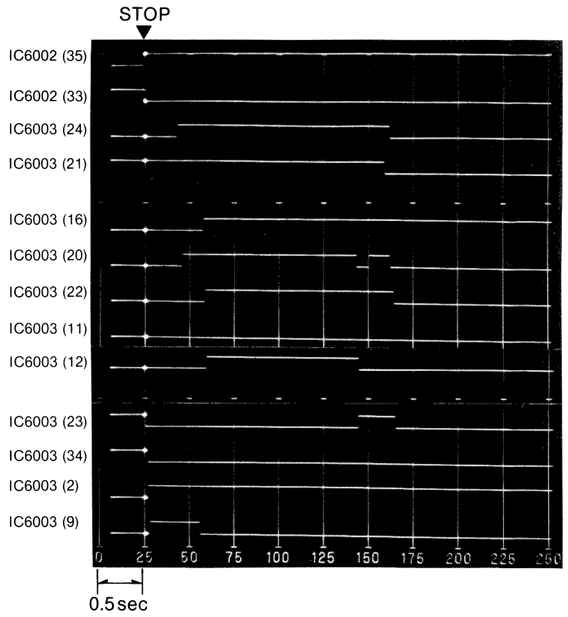

3. STOP → F.F.

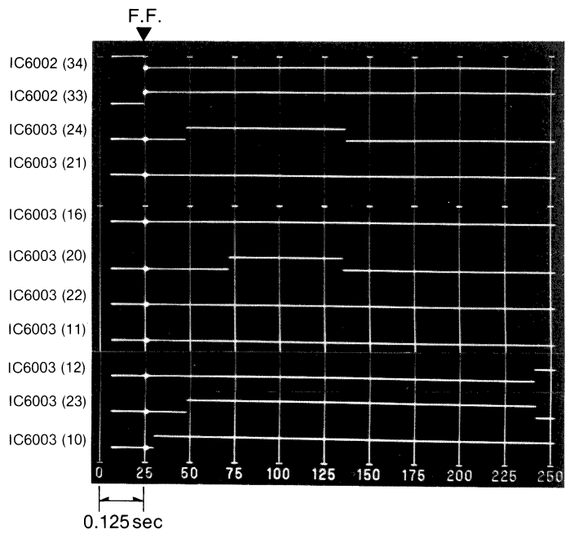

4. F.F. → STOP

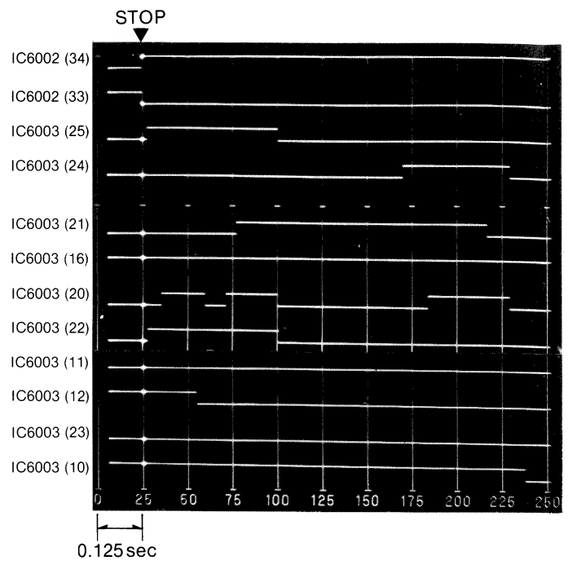

5. STOP

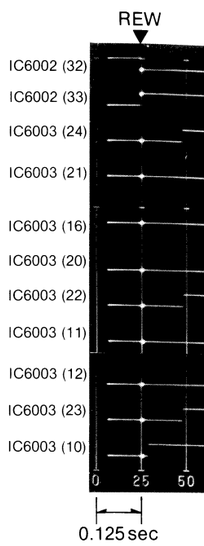

6. REW → STOP

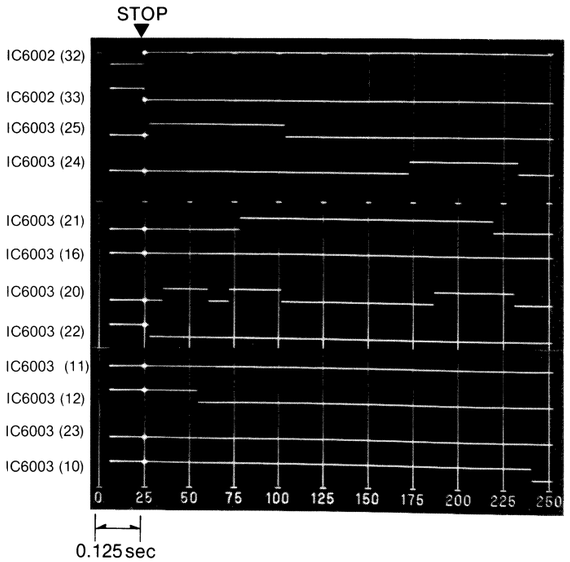

7. STOP → EJECT

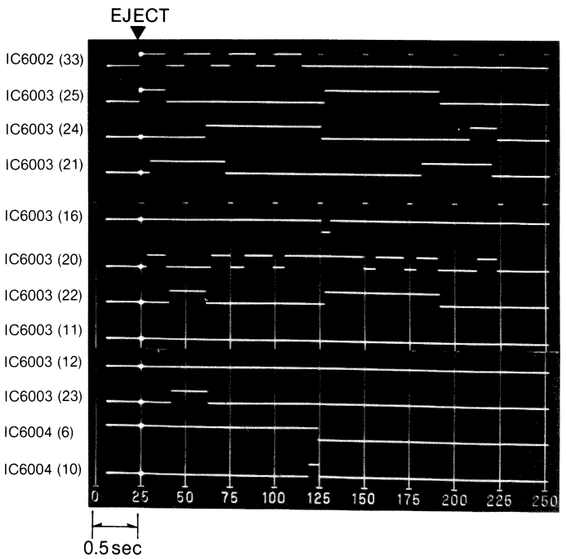

8. REC • PLAY → REC • PAUSE

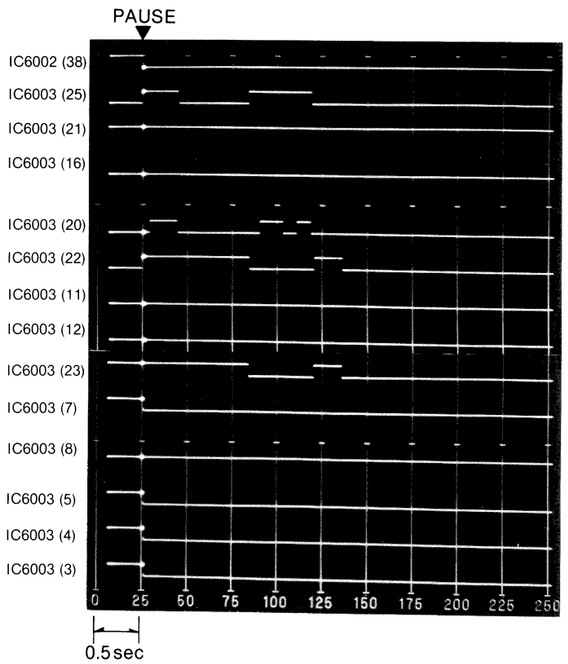

9. REC • PAUSE → REC • PLAY

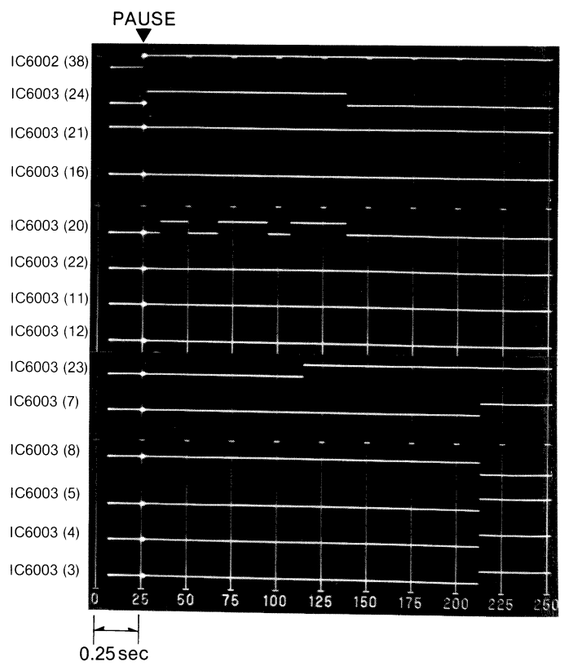

10. PLAY

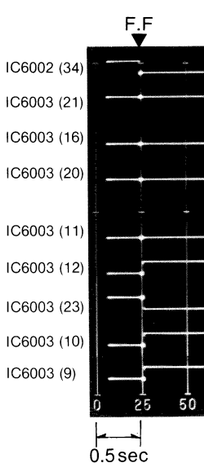

3. STOP → F.F.

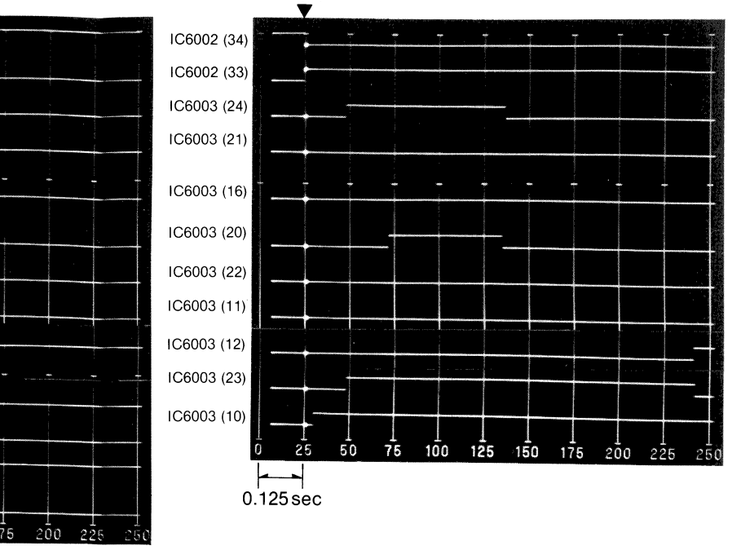

4. F.F. → STOP

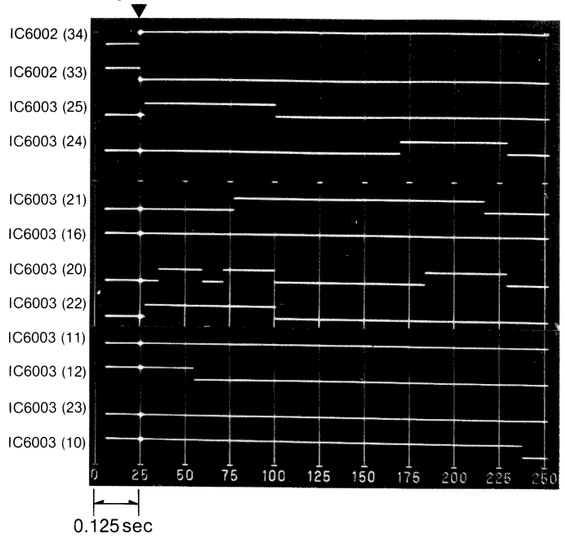

5. STOP → REW

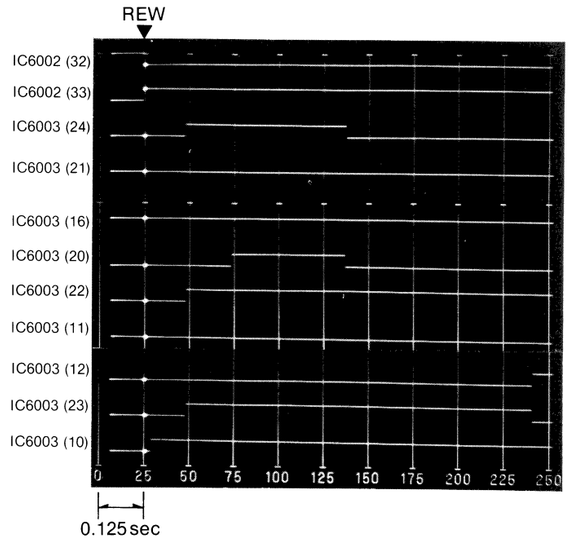

8. REC • PLAY → REC • PAUSE

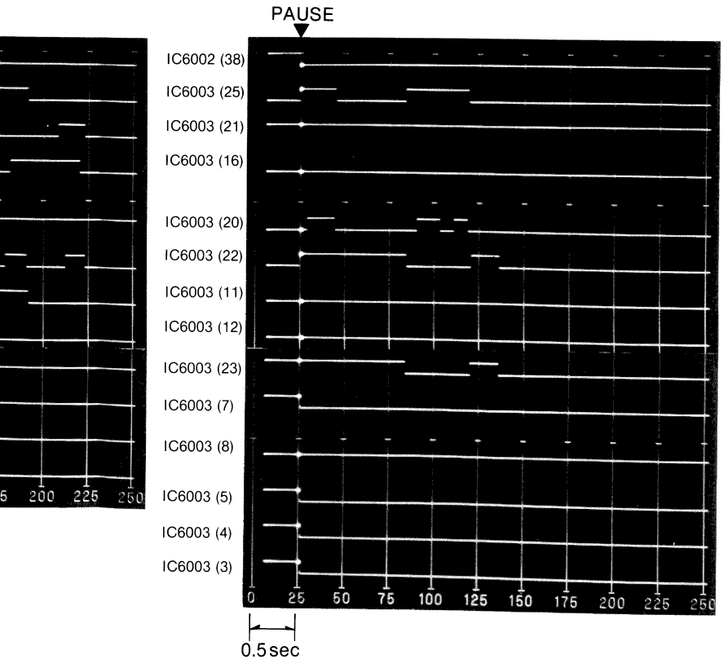

9. REC • PAUSE → REC • PLAY

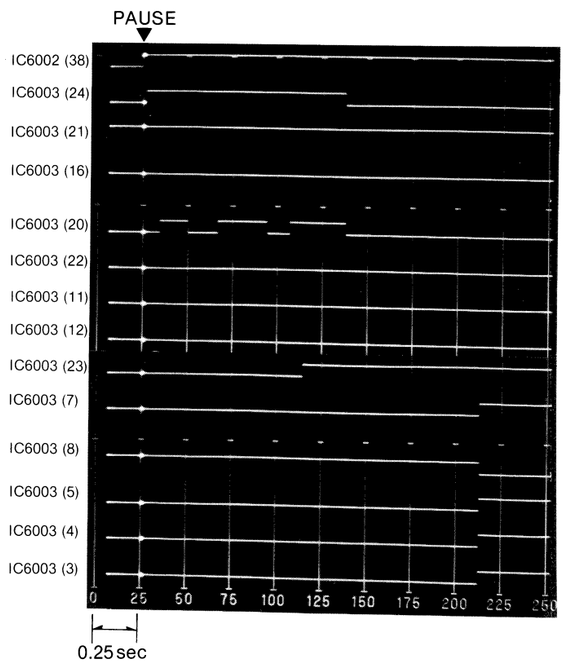

10. PLAY → CUE → PLAY

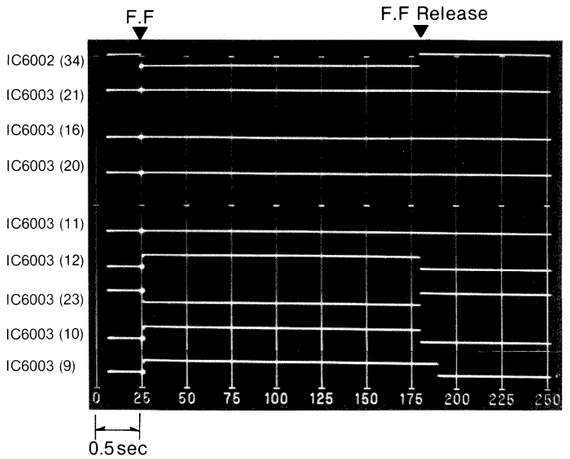

11. PLAY → REVIEW → PLAY

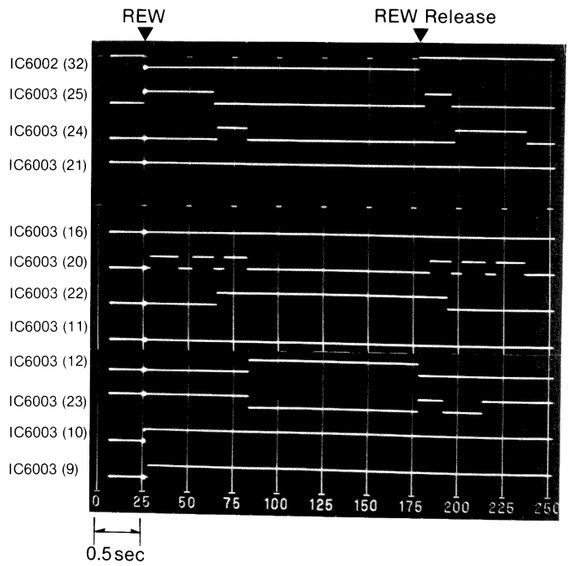

SYSTEM CONTROL BLOCK DIAGRAM

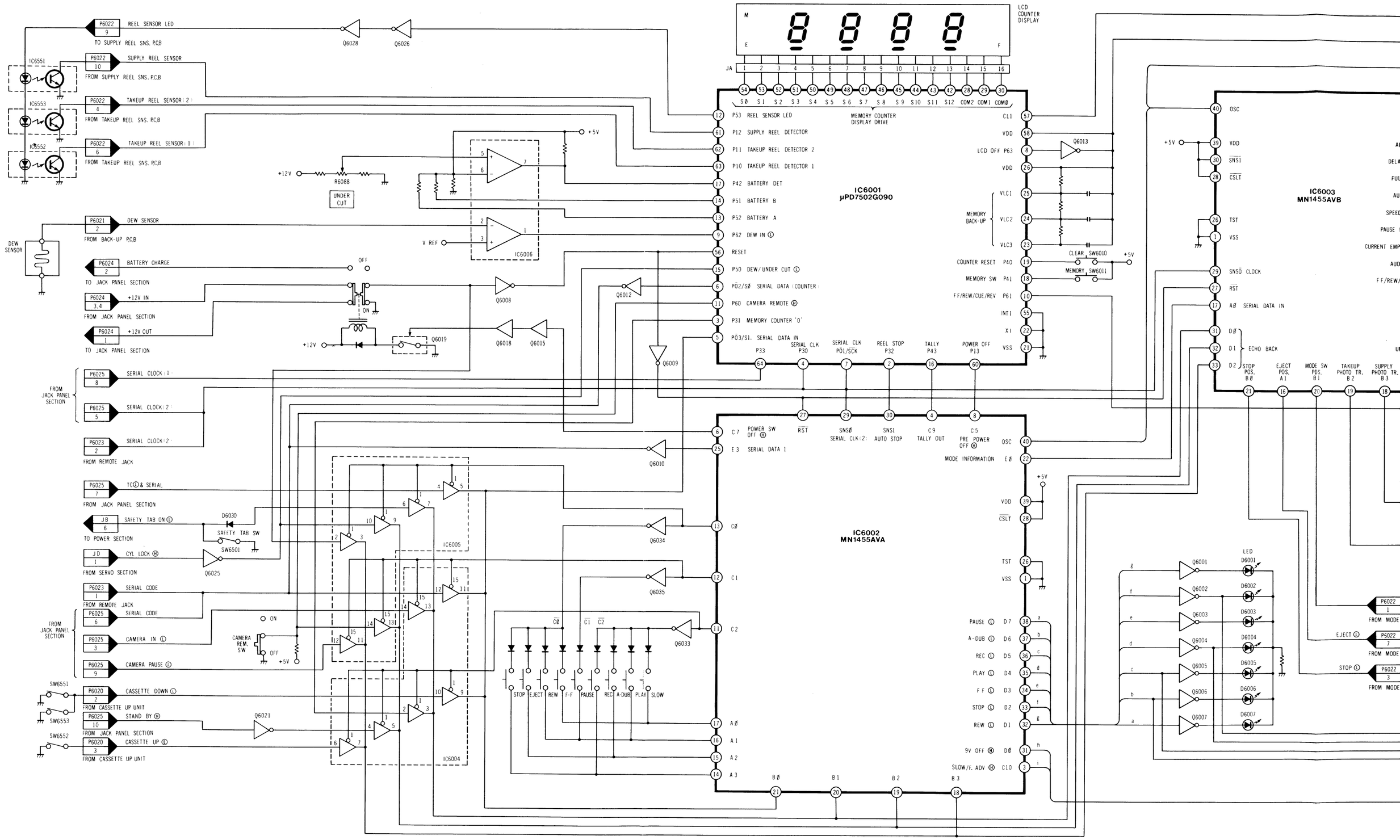

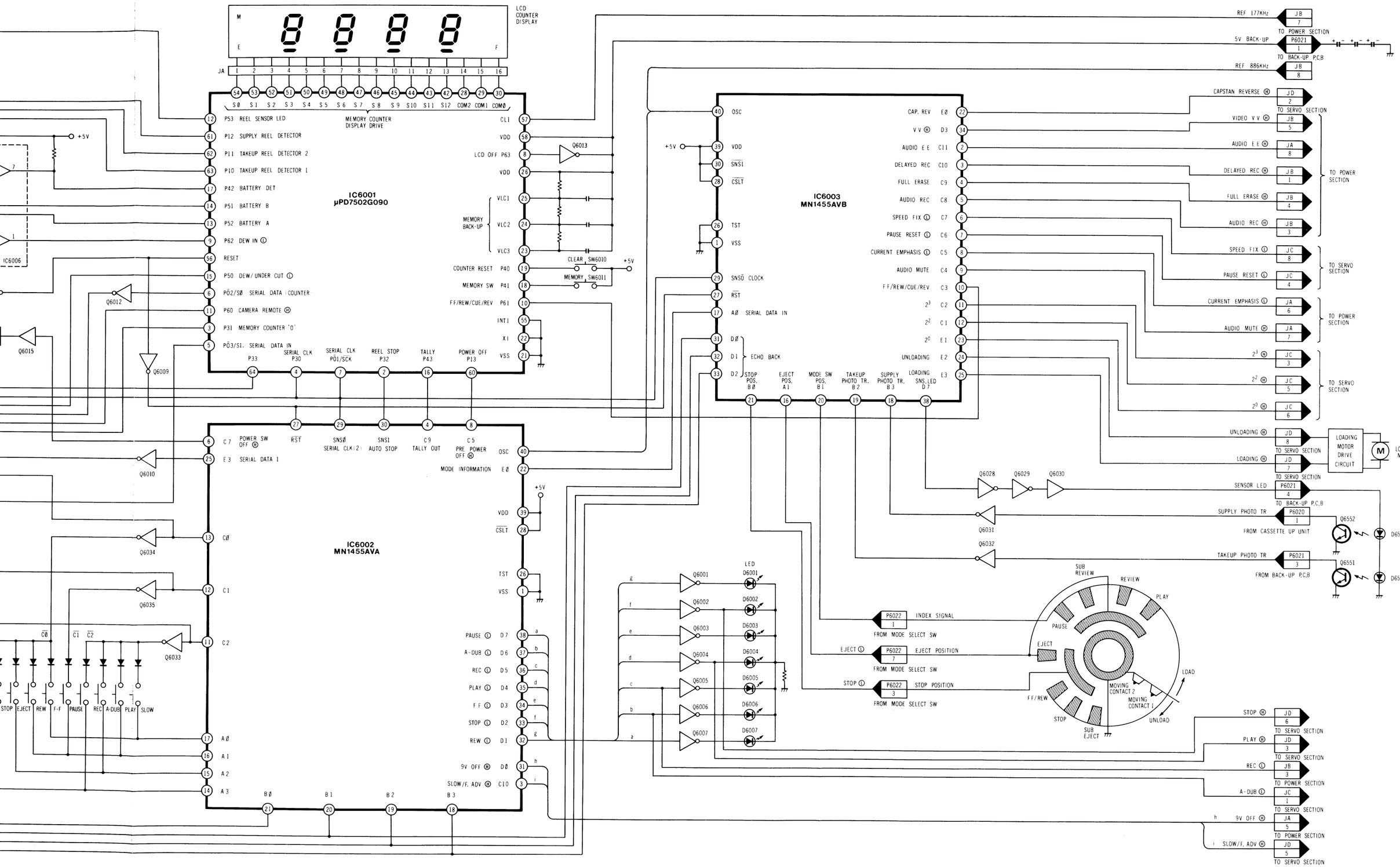
LCD COUNTER DISPLAY
IC6001 μPD7502G090
IC6002 MN1455AVA
IC6003 MN1455AVB
MEMORY COUNTER DISPLAY DRIVE
MEMORY BACK-UP
P53 REEL SENSOR LED
P12 SUPPLY REEL DETECTOR
P11 TAKEUP REEL DETECTOR 2
P10 TAKEUP REEL DETECTOR 1
P42 BATTERY DET
P51 BATTERY B
P52 BATTERY A
P62 DEW IN
RESET
P50 DEW/UNDER CUT
P02/S0 SERIAL DATA COUNTER
P60 CAMERA REMOTE
P31 MEMORY COUNTER '0'
P03/S1 SERIAL DATA IN
LCD OFF P63
COUNTER RESET P40
MEMORY SW P41
FF/REW/CUE/REV P61
CLEAR SW6010
MEMORY SW6011
POWER SW OFF
SERIAL DATA 1
SERIAL CLK
AUTO STOP
TALLY OUT
PRE POWER OFF
MODE INFORMATION
PAUSE
A-DUB
REC
PLAY
FF
STOP
REW
9V OFF
SLOW/F. ADV
CAP. REV
VV
AUDIO EE
DELAYED REC
FULL ERASE
AUDIO REC
SPEED FIX
PAUSE RESET
CURRENT EMPHASIS
AUDIO MUTE
FF/REW/CUE/REV
UNLOADING
LOADING
SERIAL DATA IN
ECHO BACK
STOP POS.
EJECT POS.
MODE SW POS.
TAKEUP PHOTO TR.
SUPPLY PHOTO TR.
LOADING SNS.LED
REF 177KHz
5V BACK-UP
REF 886KHz
TO POWER SECTION
TO BACK-UP P.C.B
CAPSTAN REVERSE
TO SERVO SECTION
LOADING MOTOR DRIVE CIRCUIT
LOADING MOTOR
SENSOR LED
SUPPLY PHOTO TR
FROM CASSETTE UP UNIT
TAKEUP PHOTO TR
FROM BACK-UP P.C.B
INDEX SIGNAL
FROM MODE SELECT SW
EJECT POSITION
STOP POSITION
SUB REVIEW
REVIEW
PLAY
PAUSE
EJECT
LOAD
MOVING CONTACT 2
MOVING CONTACT 1
UNLOAD
SUB EJECT
STOP
FF/REW
LED

CHROMINANCE PROCESS BLOCK DIAGRAM

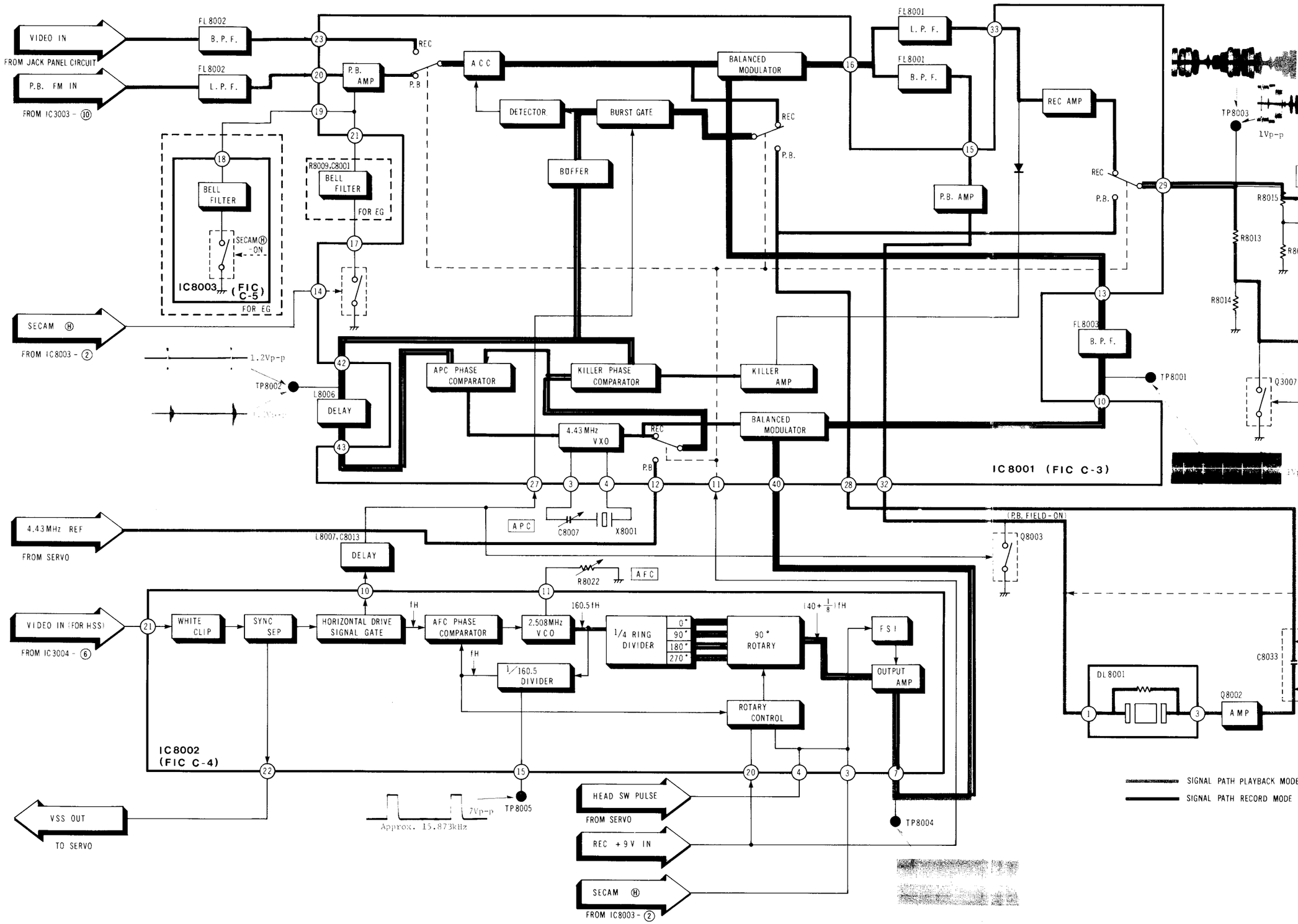

NCE PROCESS BLOCK DIAGRAM

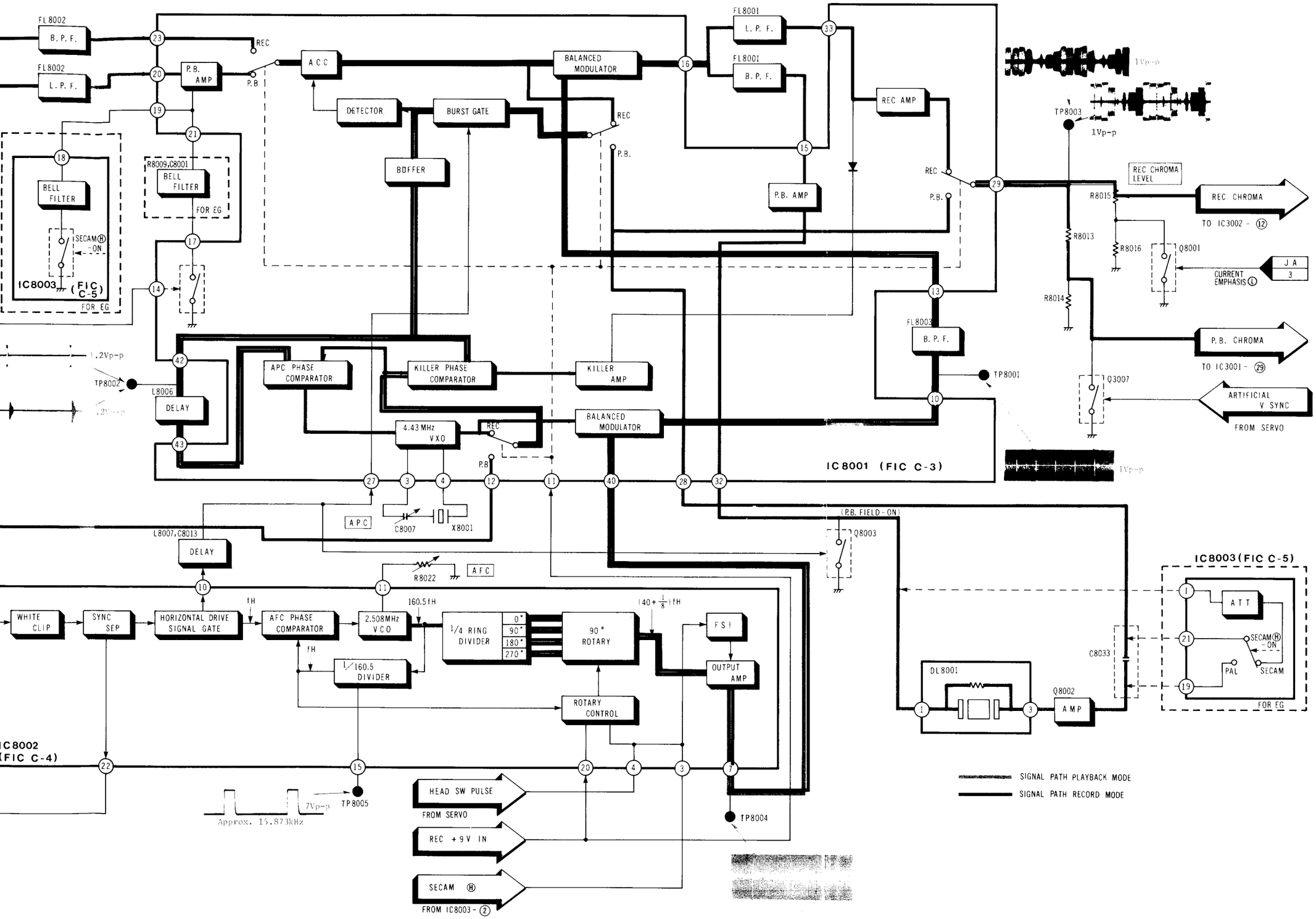

LUMINANCE PROCESS BLOCK DIAGRAM

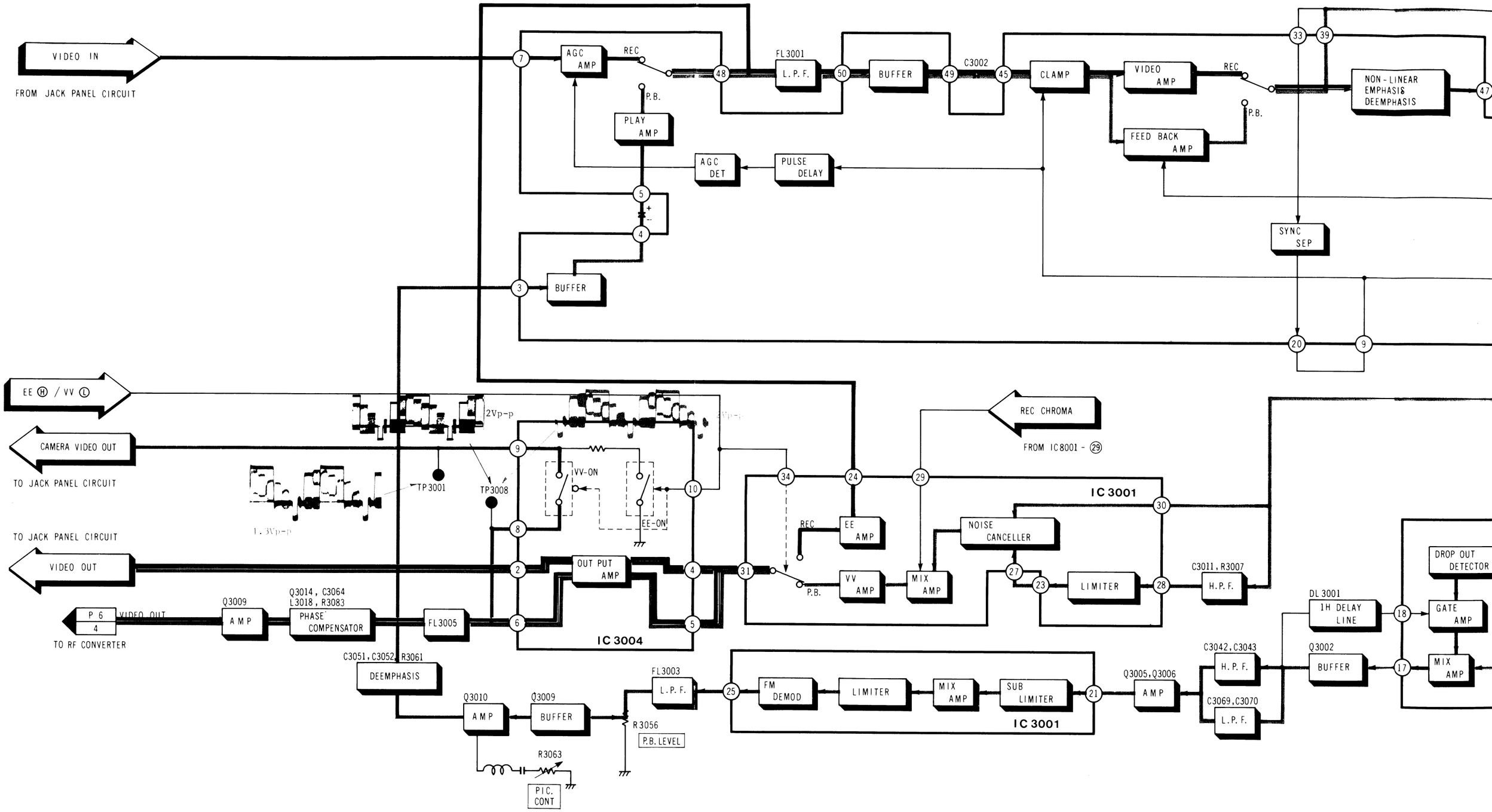

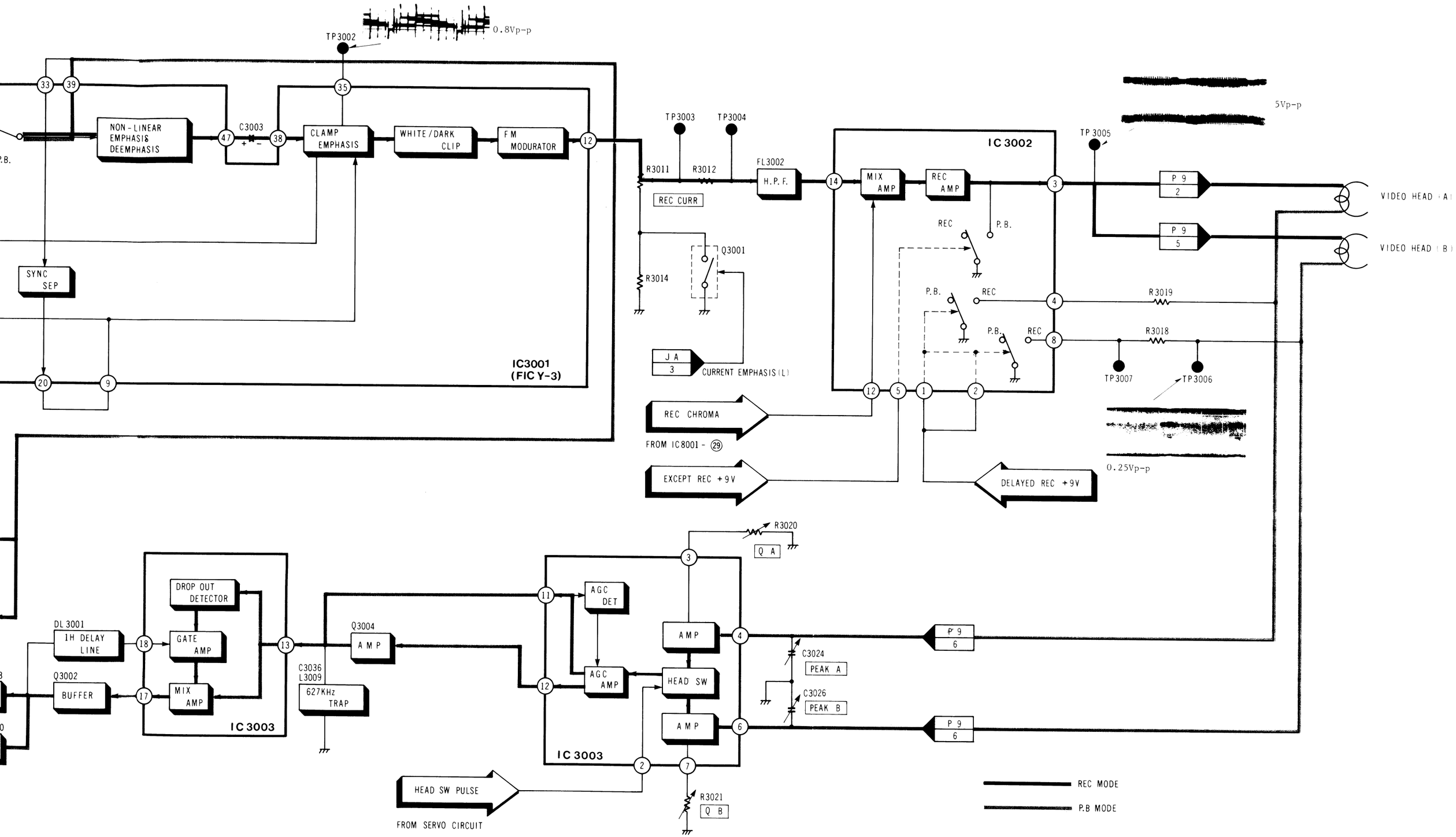
TP3002
0.8Vp-p
NON-LINEAR EMPHASIS DEEMPHASIS
C3003
CLAMP EMPHASIS
WHITE/DARK CLIP
FM MODURATOR
SYNC SEP
IC3001 (FIC Y-3)
TP3003
TP3004
R3011
R3012
FL3002
H.P.F.
REC CURR
R3014
Q3001
J A 3
CURRENT EMPHASIS (L)
IC 3002
MIX AMP
REC AMP
REC
P.B.
TP 3005
5Vp-p
P 9 2
P 9 5
VIDEO HEAD (A)
VIDEO HEAD (B)
R3019
R3018
TP3007
TP3006
0.25Vp-p
REC CHROMA
FROM IC8001 - 29
EXCEPT REC +9V
DELAYED REC +9V
R3020
Q A
DL 3001
1H DELAY LINE
Q3002
BUFFER
DROP OUT DETECTOR
GATE AMP
MIX AMP
IC 3003
Q3004
AMP
C3036
L3009
627KHz TRAP
AGC DET
AGC AMP
AMP
HEAD SW
AMP
IC 3003
C3024
PEAK A
C3026
PEAK B
P 9 6
P 9 6
HEAD SW PULSE
FROM SERVO CIRCUIT
R3021
Q B
REC MODE
P.B MODE

SERVO BLOCK DIAGRAM

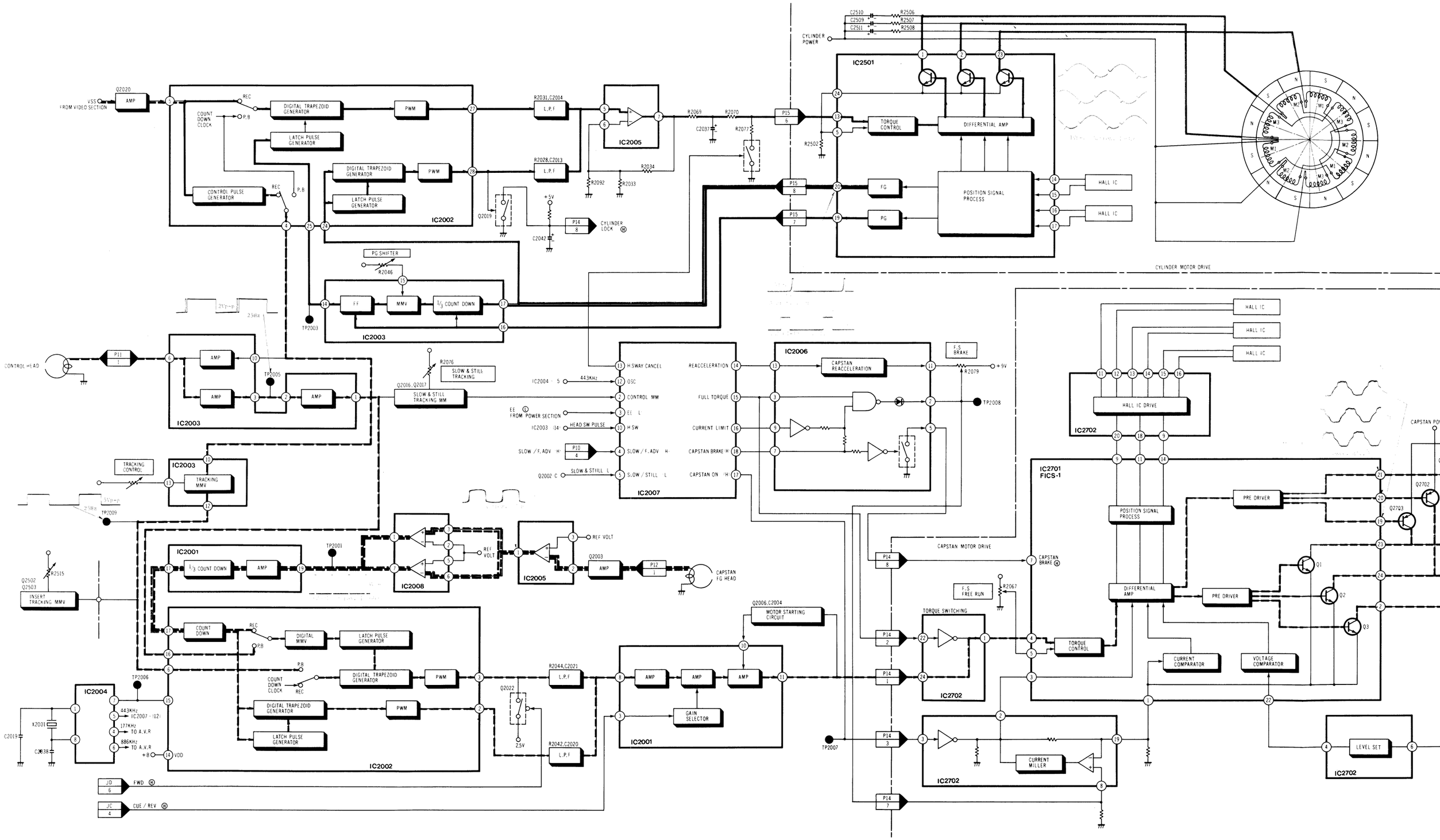

RF CONVERTER BLOCK DIAGRAM

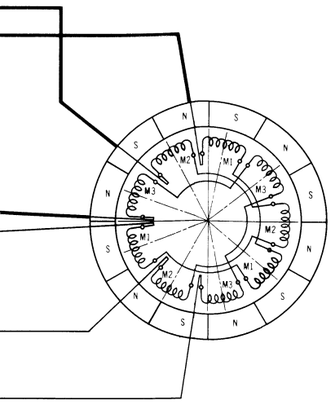

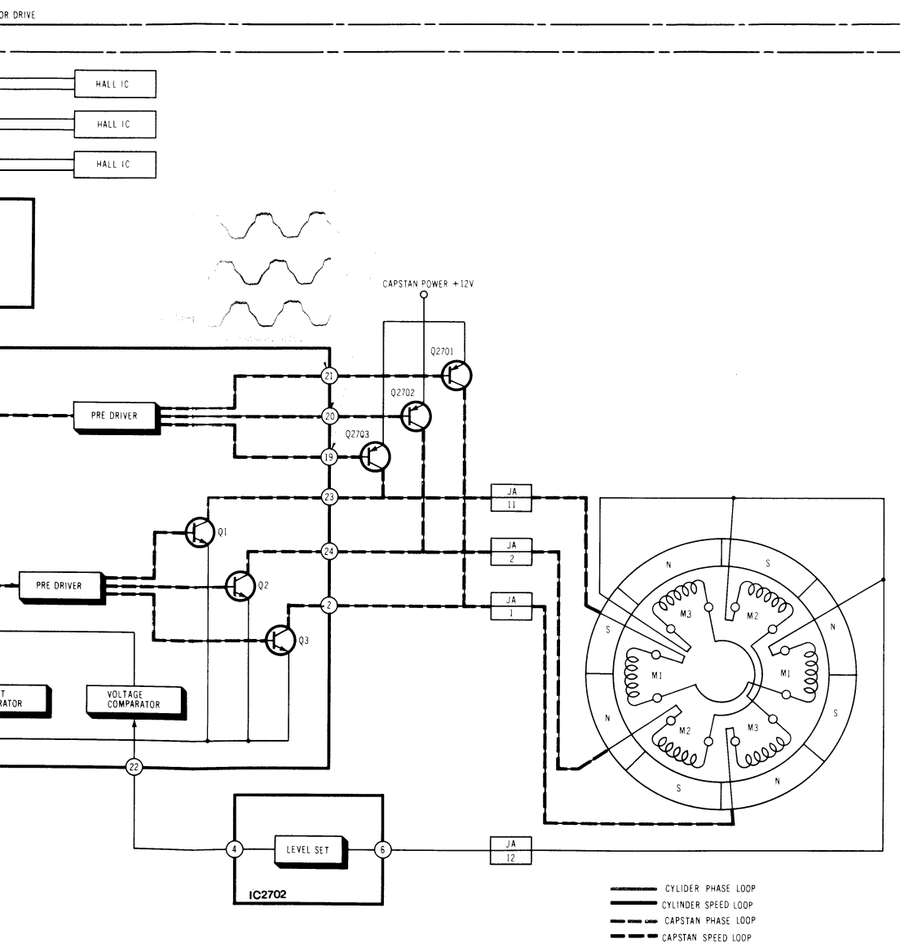

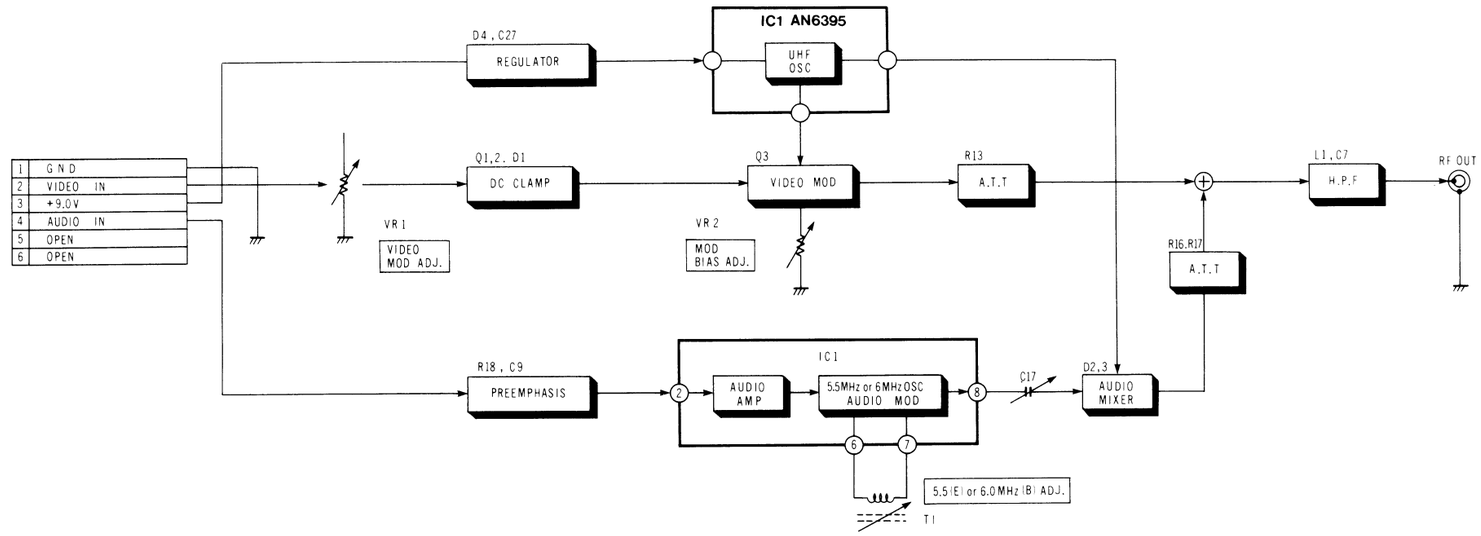

A.V.R. SECTION SCHEMATIC DIAGRAM

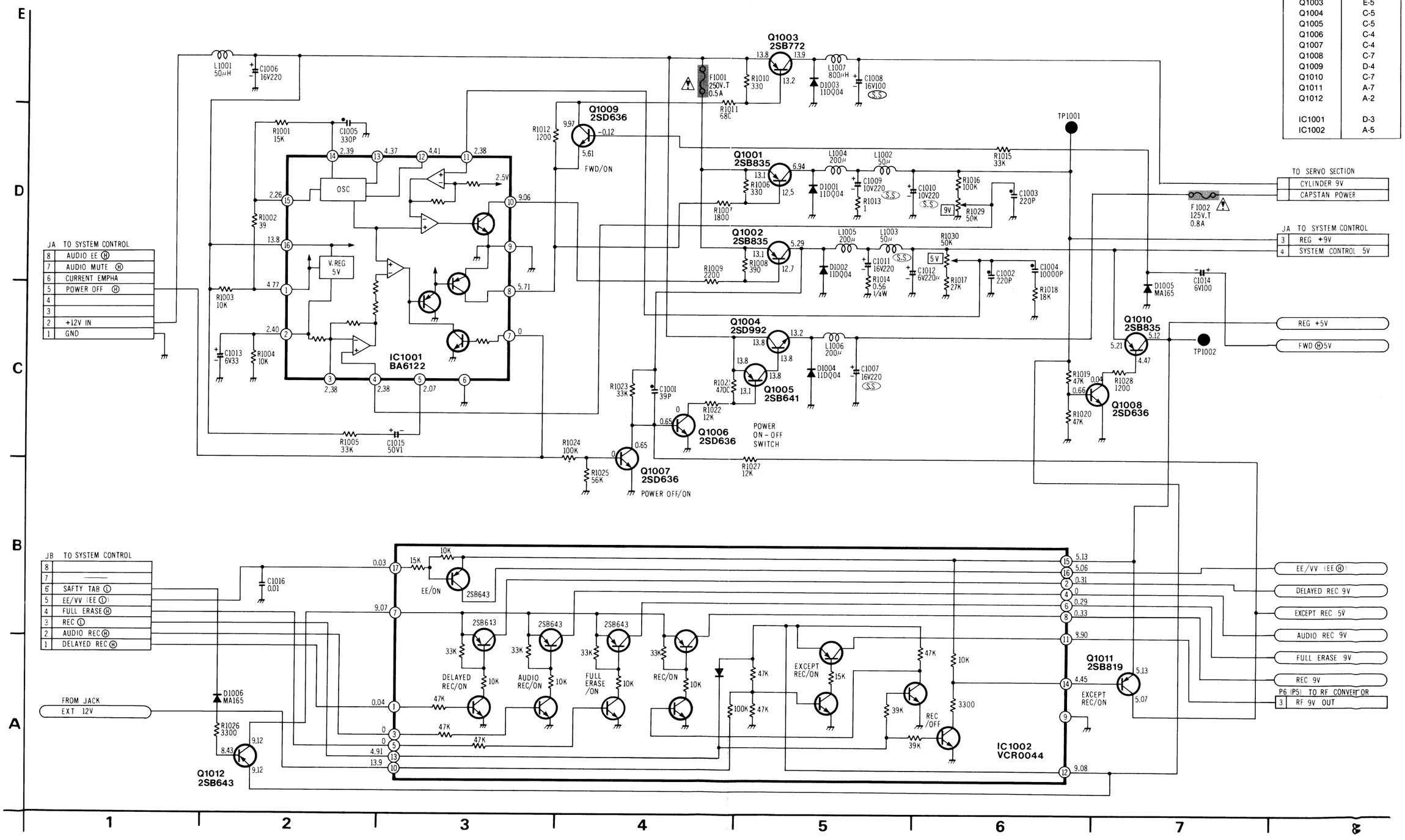

A.V.R Schematic	
Q1001	D-5
Q1002	D-5
Q1003	E-5
Q1004	C-5
Q1005	C-5
Q1006	C-4
Q1007	C-4
Q1008	C-7
Q1009	D-4
Q1010	C-7
Q1011	A-7
Q1012	A-2
IC1001	D-3
IC1002	A-5

JACK PANEL SECTION SCHEMATIC DIAGRAM

Jack Panel Schematic	
Q6501	E-3
Q6502	C-3
Q6503	C-4
Q6504	C-4
Q6505	C-5
Q6506	C-5
Q6507	C-7
Q6508	D-7
Q6509	D-8
IC6501	E-5

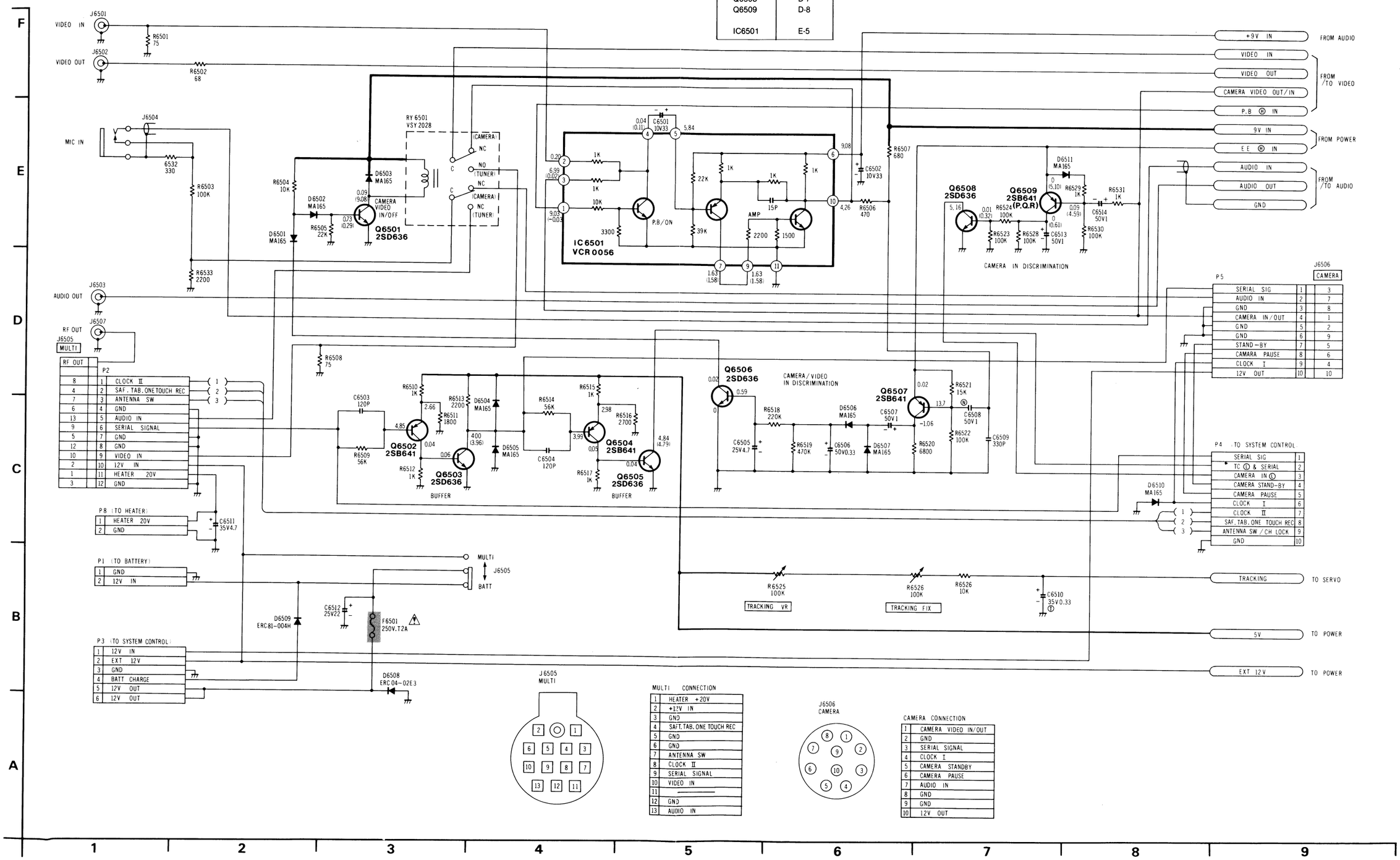

MULTI	CONNECTION
1	HEATER +20V
2	+12V IN
3	GND
4	SAFT.TAB.ONE TOUCH REC
5	GND
6	GND
7	ANTENNA SW
8	CLOCK II
9	SERIAL SIGNAL
10	VIDEO IN
11	———
12	GND
13	AUDIO IN

CAMERA	CONNECTION
1	CAMERA VIDEO IN/OUT
2	GND
3	SERIAL SIGNAL
4	CLOCK I
5	CAMERA STANDBY
6	CAMERA PAUSE
7	AUDIO IN
8	GND
9	GND
10	12V OUT

LOADING MOTOR DRIVE SECTION SCHEMATIC DIAGRAM

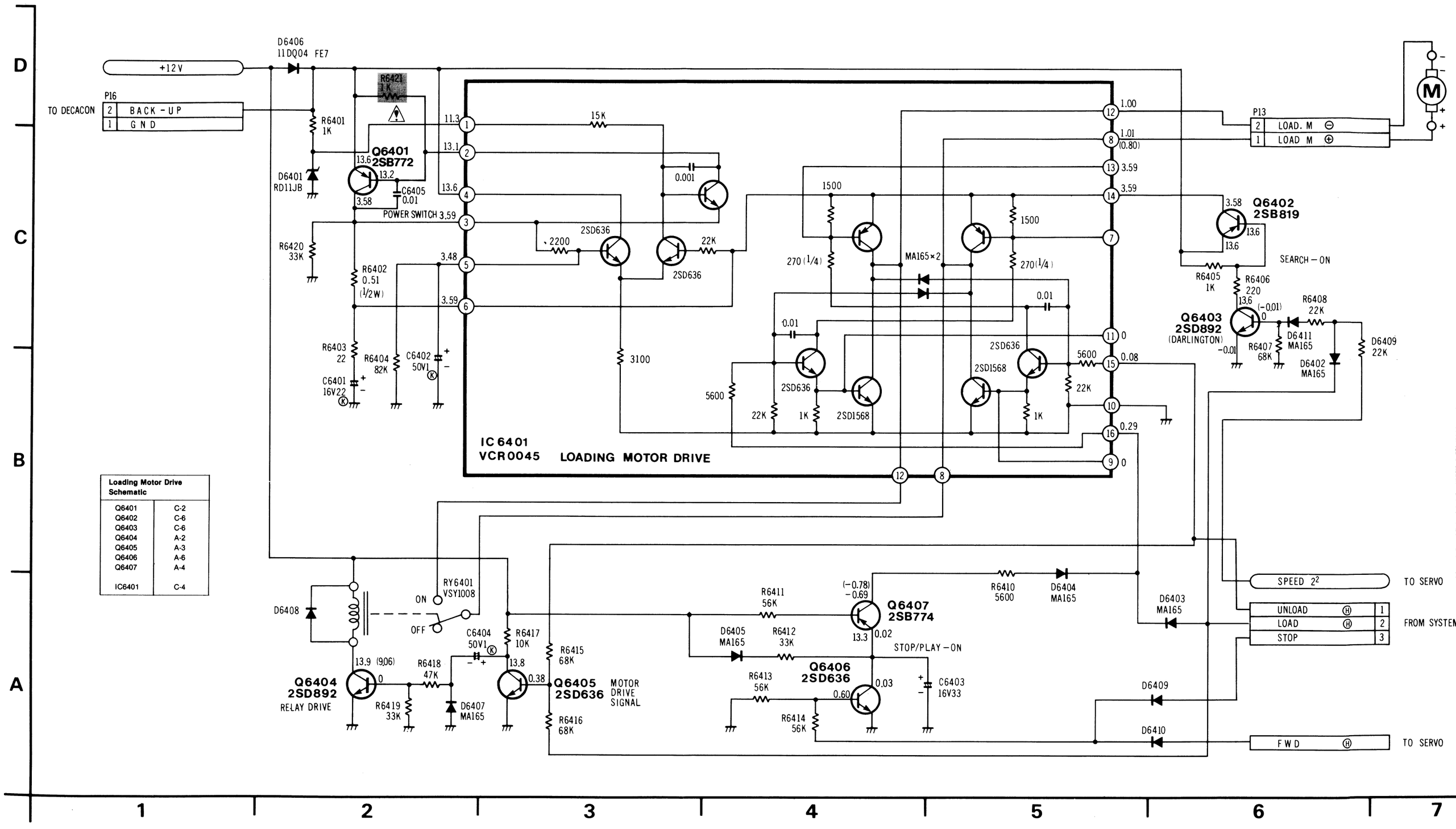

MAIN (A.V.R., SERVO, LUMINANCE & CHROMINANCE, AUDIO, LOADING MOTO
[VEP03137A; NV-100E/B: VEP03137B; NV-100EG]

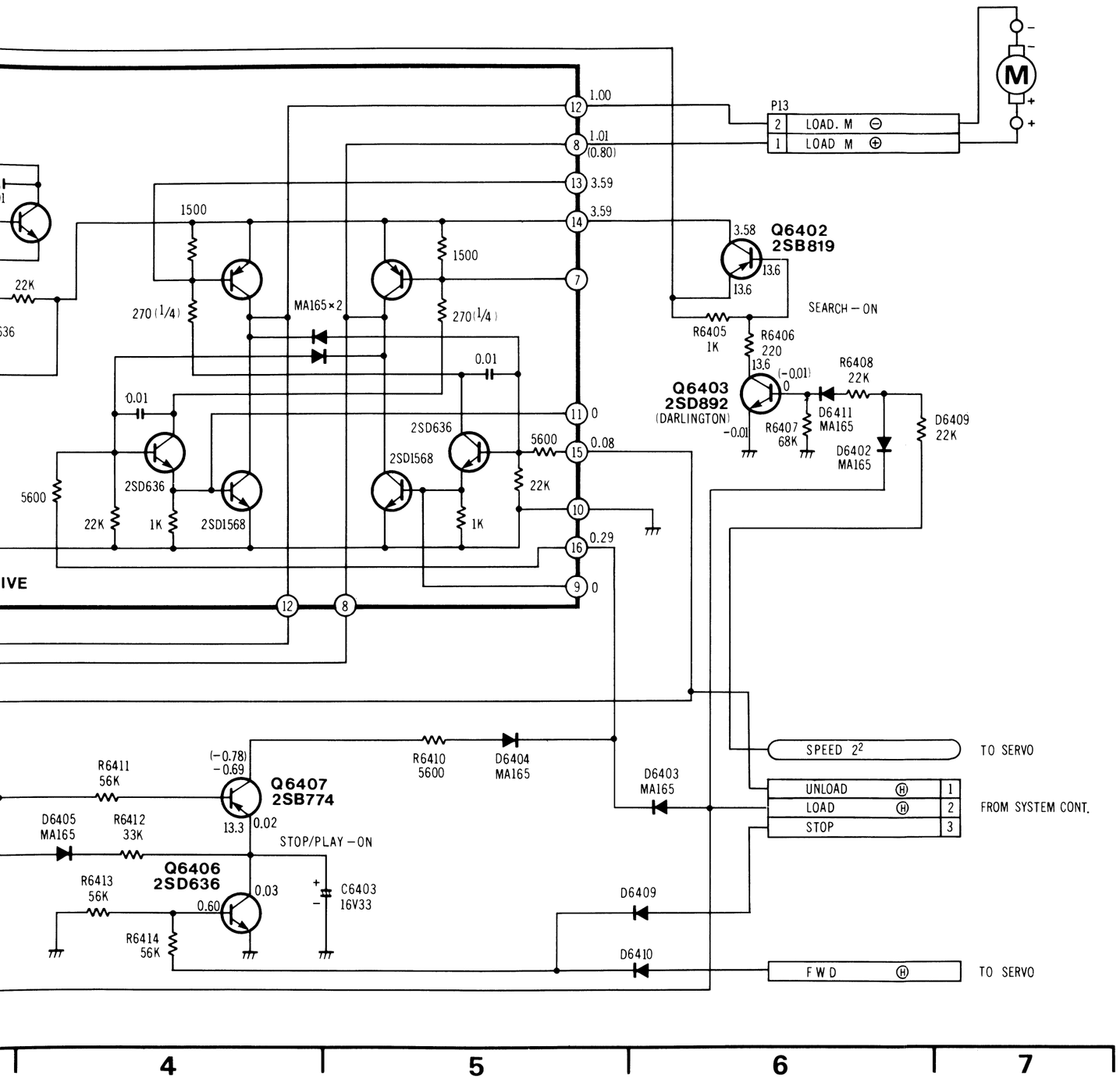

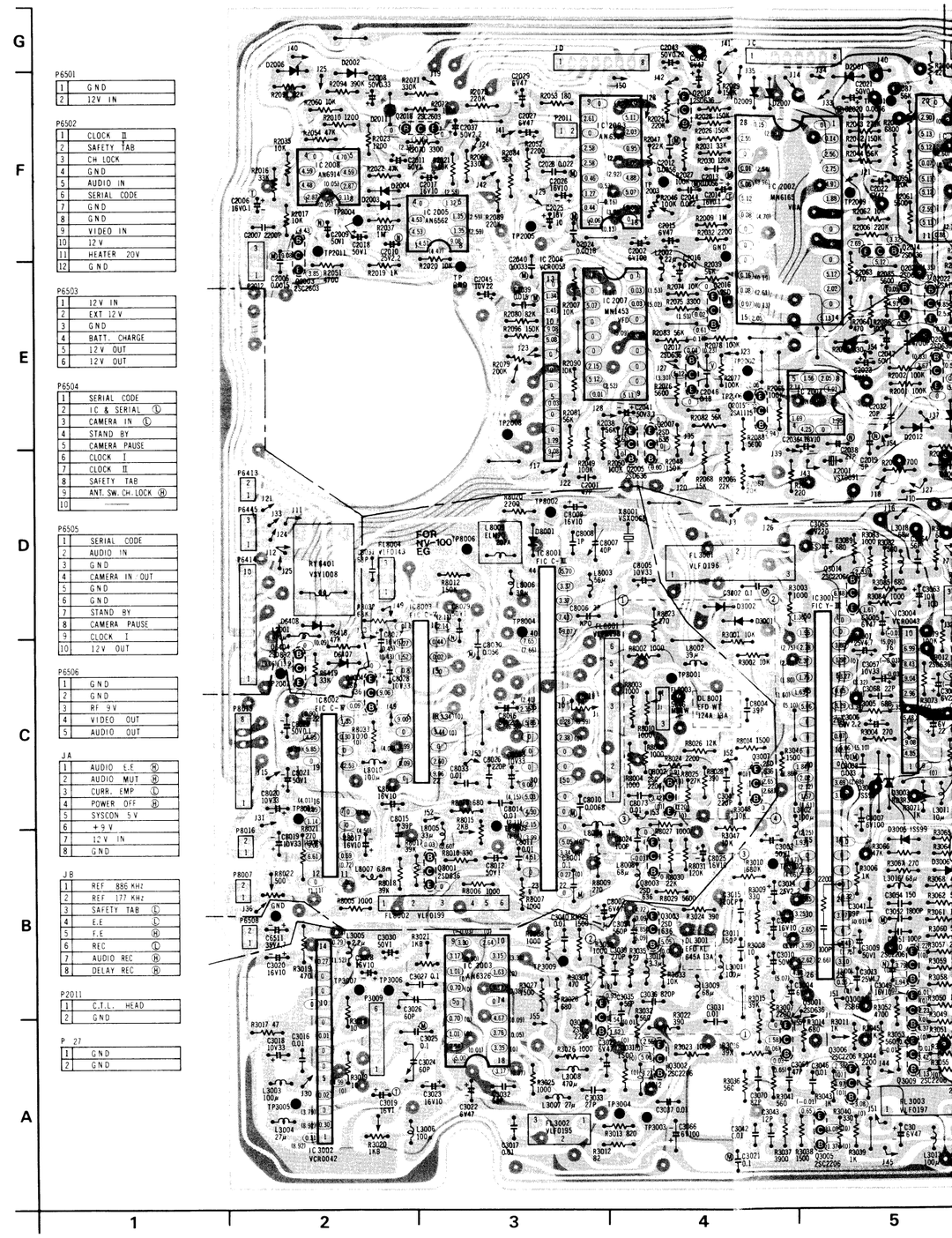

MAIN (A.V.R., SERVO, LUMINANCE & CHROMINANCE, AUDIO, LOADING MOTOR DRIVE AND JACK PANEL SECTION) P.C.B UNIT
[VEP03137A; NV-100E/B: VEP03137B; NV-100EG]

NOTE: UNLESS OTHERWISE SPECIFIED
UNLESS OTHERWISE SPECIFIED,

O SERVO

ROM SYSTEM CONT.

O SERVO

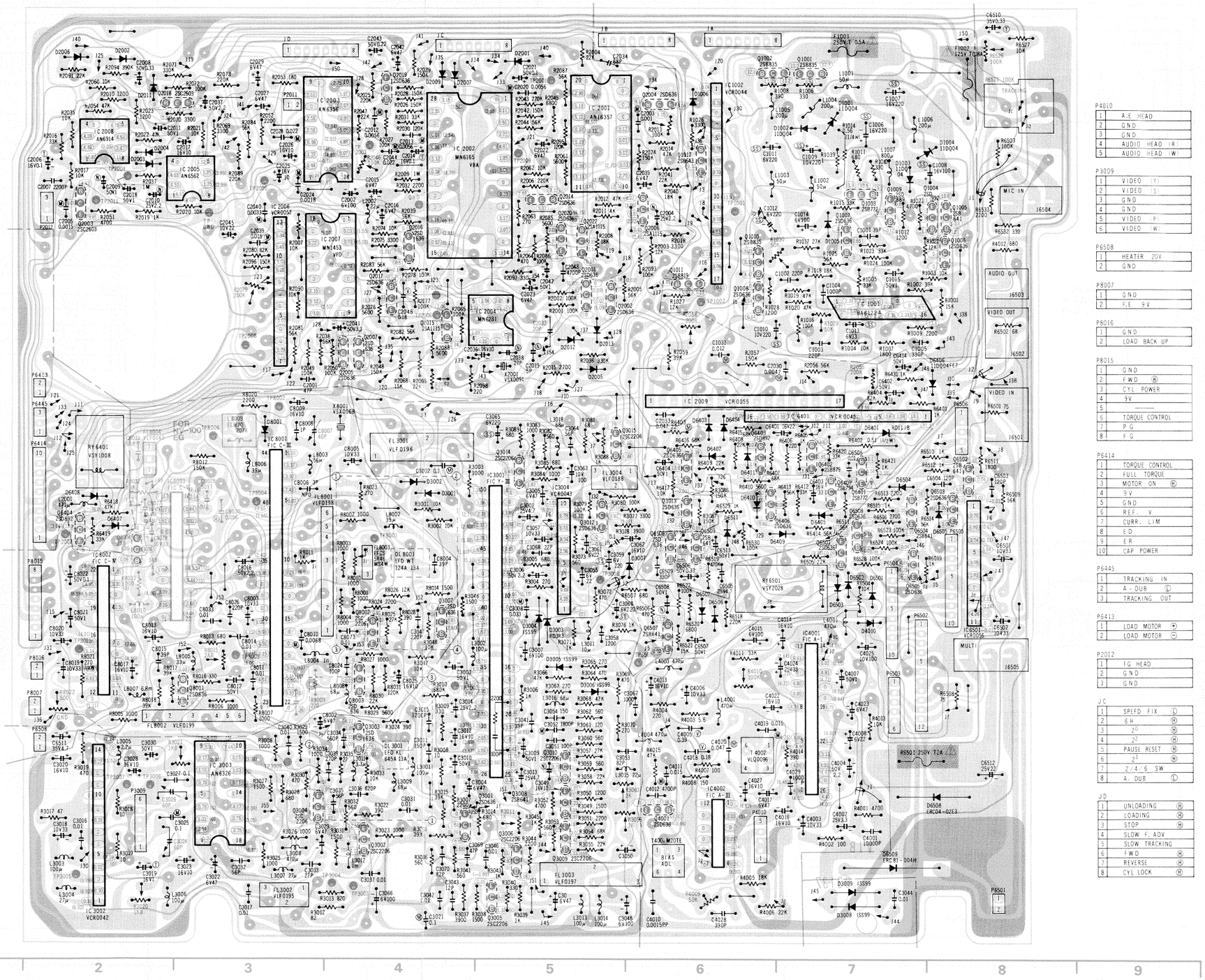

P6501

1	GND
2	12V IN

P6502

1	CLOCK II
2	SAFETY TAB
3	CH LOCK
4	GND
5	AUDIO IN
6	SERIAL CODE
7	GND
8	GND
9	VIDEO IN
10	12V
11	HEATER 20V
12	GND

P6503

1	12V IN
2	EXT 12V
3	GND
4	BATT. CHARGE
5	12V OUT
6	12V OUT

P6504

1	SERIAL CODE
2	I.C & SERIAL Ⓛ
3	CAMERA IN Ⓛ
4	STAND BY
5	CAMERA PAUSE
6	CLOCK I
7	CLOCK II
8	SAFETY TAB
9	ANT. SW. CH. LOCK Ⓗ
10	——

P6505

1	SERIAL CODE
2	AUDIO IN
3	GND
4	CAMERA IN / OUT
5	GND
6	GND
7	STAND BY
8	CAMERA PAUSE
9	CLOCK I
10	12V OUT

P6506

1	GND
2	GND
3	RF 9V
4	VIDEO OUT
5	AUDIO OUT

JA

1	AUDIO E.E Ⓗ
2	AUDIO MUT Ⓗ
3	CURR. EMP Ⓛ
4	POWER OFF Ⓗ
5	SYSCON 5V
6	+9V
7	12V IN
8	GND

JB

1	REF 885 KHZ
2	REF 177 KHZ
3	SAFETY TAB Ⓛ
4	E.E Ⓛ
5	F.E Ⓗ
6	REC Ⓛ
7	AUDIO REC Ⓗ
8	DELAY REC Ⓗ

P2011

1	C.T.L. HEAD
2	GND

P 27

1	GND
2	GND

P4010

1	A.E HEAD
2	GND
3	GND
4	AUDIO HEAD (R)
5	AUDIO HEAD (W)

P3009

1	VIDEO (Y)
2	VIDEO (S)
3	GND
4	GND
5	VIDEO (P)
6	VIDEO (W)

P6508

1	HEATER 20V
2	GND

P8007

1	GND
2	F.E 9V

P8016

1	GND
2	LOAD BACK UP

P8015

1	GND
2	FWD Ⓗ
3	CYL POWER
4	9V
5	——
6	TORQUE CONTROL
7	P G
8	F G

P6414

1	TORQUE CONTROL
2	FULL TORQUE
3	MOTOR ON Ⓗ
4	9V
5	GND
6	REF. V
7	CURR. LIM
8	ED
9	ER
10	CAP POWER

P6445

1	TRACKING IN
2	A-DUB Ⓛ
3	TRACKING OUT

P6413

1	LOAD MOTOR ⊕
2	LOAD MOTOR ⊖

P2012

1	FG HEAD
2	GND
3	GND

JC

1	SPEED FIX Ⓛ
2	6H Ⓗ
3	2^0 Ⓗ
4	2^2 Ⓗ
5	PAUSE RESET Ⓗ
6	2^3 Ⓗ
7	2/4/6 SW
8	A. DUB Ⓛ

JD

1	UNLOADING Ⓗ
2	LOADING Ⓗ
3	STOP Ⓗ
4	SLOW F. ADV
5	SLOW TRACKING
6	FWD Ⓗ
7	REVERSE Ⓗ
8	CYL LOCK Ⓗ

MAIN P.C.B

A.V.R Section	
Q1001	F-7
Q1002	F-6
Q1003	E-7
Q1004	E-7
Q1005	E-7
Q1006	E-7
Q1007	E-7
Q1008	E-6
Q1009	E-7
Q1010	E-6
Q1011	E-6
Q1012	E-6
IC1001	E-7
IC1002	E-6

MAIN P.C.B

Jack Panel Section	
Q6501	C-7
Q6502	C-8
Q6503	C-8
Q6504	C-7
Q6505	C-7
Q6506	C-6
Q6507	B-6
Q6508	C-7
Q6509	C-6
IC6501	C-8

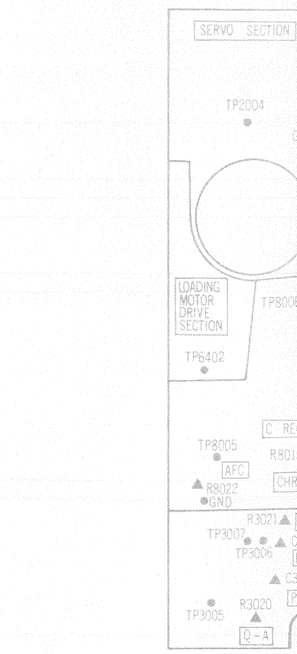

NOTE: UNLESS OTHERWISE SPECIFIED, ALL DIODES ARE MA165
UNLESS OTHERWISE SPECIFIED, ALL Tr's ARE 2SD636 (NPN TYPE)

MAIN P.C.B	
A.V.R Section	
Q1001	F-7
Q1002	F-6
Q1003	E-7
Q1004	E-7
Q1005	E-7
Q1006	E-7
Q1007	E-7
Q1008	E-6
Q1009	E-7
Q1010	E-6
Q1011	E-6
Q1012	E-6
IC1001	E-7
IC1002	E-6

MAIN P.C.B	
Loading motor Drive Section	
Q6401	C-7
Q6402	C-7
Q6403	C-6
Q6404	C-2
Q6405	C-6
Q6406	C-6
Q6407	C-7
IC6401	C-7

MAIN P.C.B	
Jack Panel Section	
Q6501	C-7
Q6502	C-8
Q6503	C-8
Q6504	C-7
Q6505	C-7
Q6506	C-6
Q6507	B-6
Q6508	C-7
Q6509	C-6
IC6501	C-8

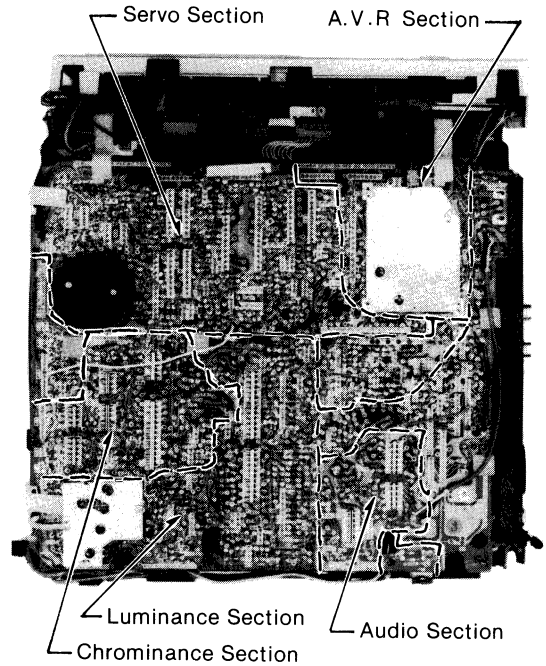

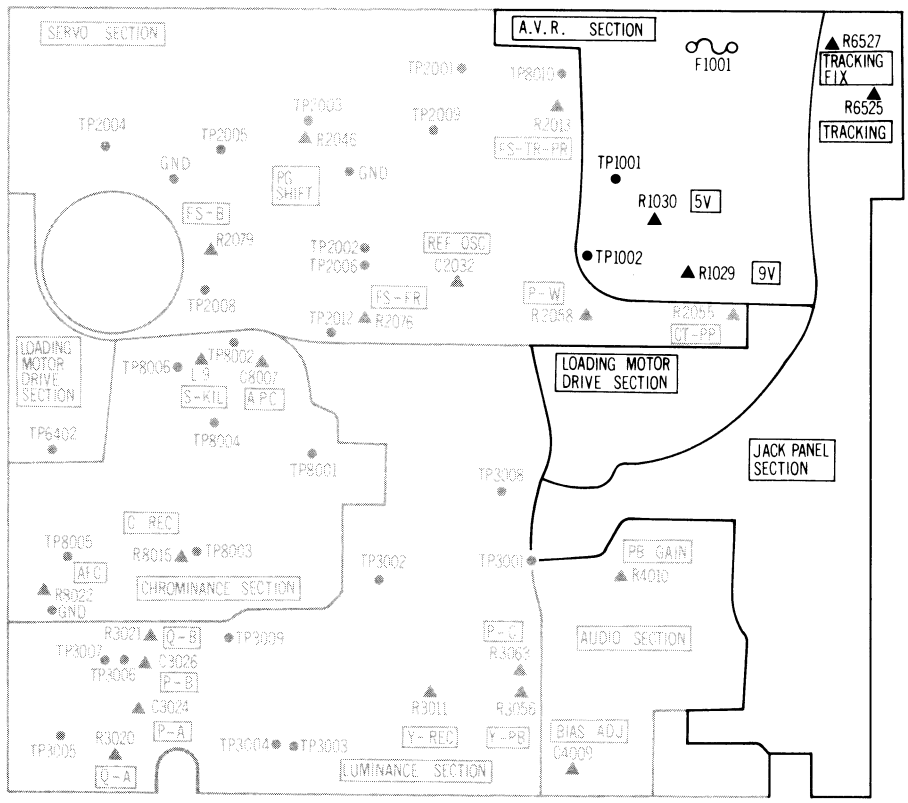

AUDIO SECTION SCHEMATIC DIAGRAM

THE MEASUREMENT MODE OF THE DC VOLTAGE IN THE BRAKETS ( ) ON THIS DIAGRAM IS RECORD MODE WITH PAL COLOUR SIGNAL.
THE MEASUREMENT MODE OF THE DC VOLTAGE OUT OF THE BRAKETS ON THIS DIAGRAM IS PLAYBACK MODE WITH PAL COLOUR SIGNAL.

Audio Schematic	
Q4001	D-7
Q6553	A-5
IC4001	C-5
IC4002	D-3

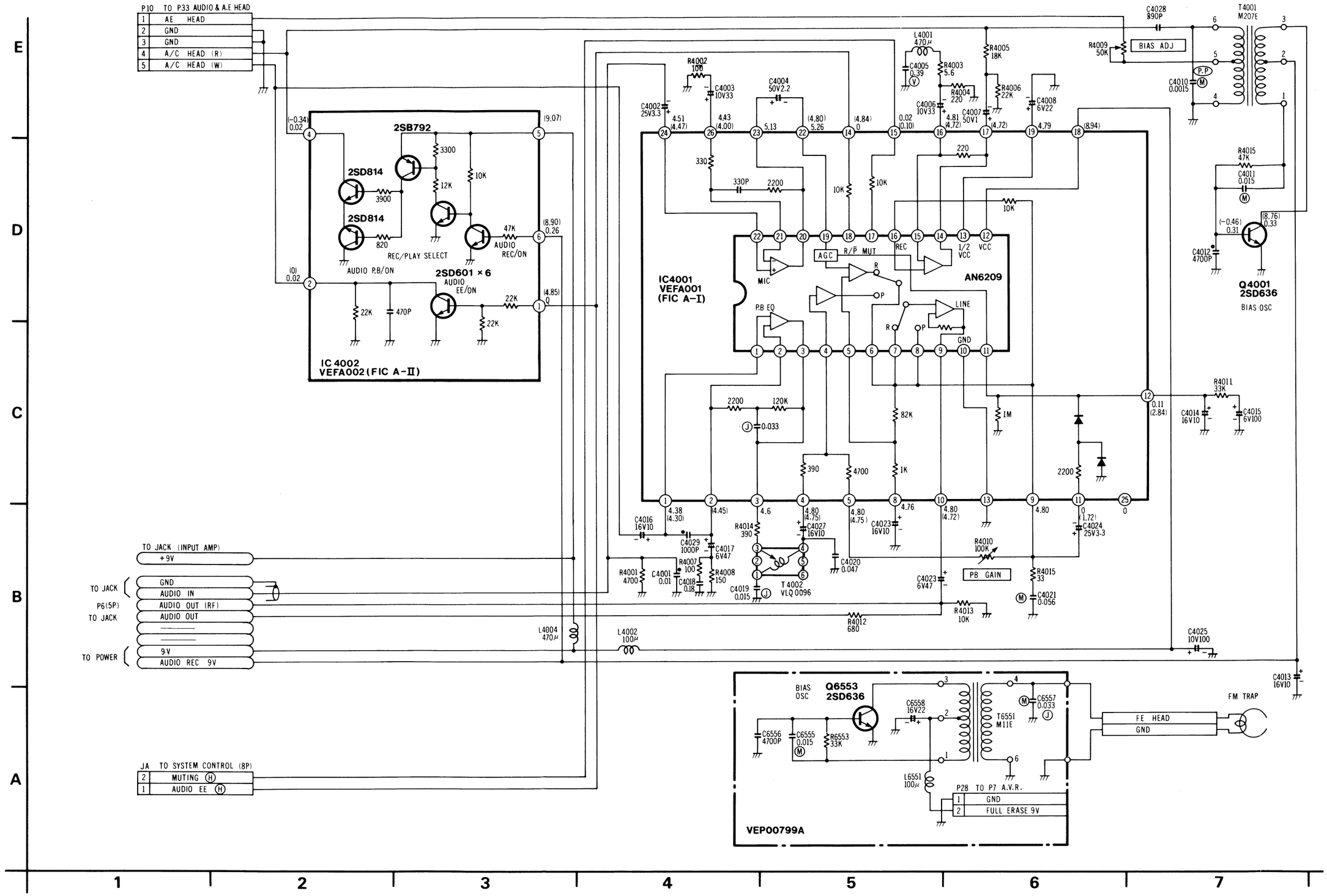

BRAKETS ( ) ON
L.
BRAKETS ON THIS

MAIN (LUMINANCE & CHROMINANCE, AUDIO, LOADING MOTOR DRIVE AND JACK PANEL SECTION) P.C.B UNIT

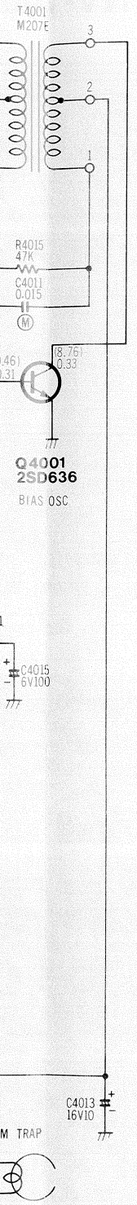

5	CAMERA PAUSE
6	CLOCK I
7	CLOCK II
8	SAFETY TAB
9	ANT. SW. CH. LOCK Ⓗ
10	———

P6505

1	SERIAL CODE
2	AUDIO IN
3	GND
4	CAMERA IN / OUT
5	GND
6	GND
7	STAND BY
8	CAMERA PAUSE
9	CLOCK I
10	12V OUT

P6506

1	GND
2	GND
3	RF 9V
4	VIDEO OUT
5	AUDIO OUT

JA

1	AUDIO E.E Ⓗ
2	AUDIO MUT Ⓗ
3	CURR. EMP Ⓛ
4	POWER OFF Ⓗ
5	SYSCON 5V
6	+9V
7	12V IN
8	GND

JB

1	REF 886 KHz
2	REF 177 KHz
3	SAFETY TAB Ⓛ
4	E.E Ⓛ
5	F.E Ⓗ
6	REC Ⓛ
7	AUDIO REC Ⓗ
8	DELAY REC Ⓗ

P2011

1	C.T.L. HEAD
2	GND

P 27

1	GND
2	GND

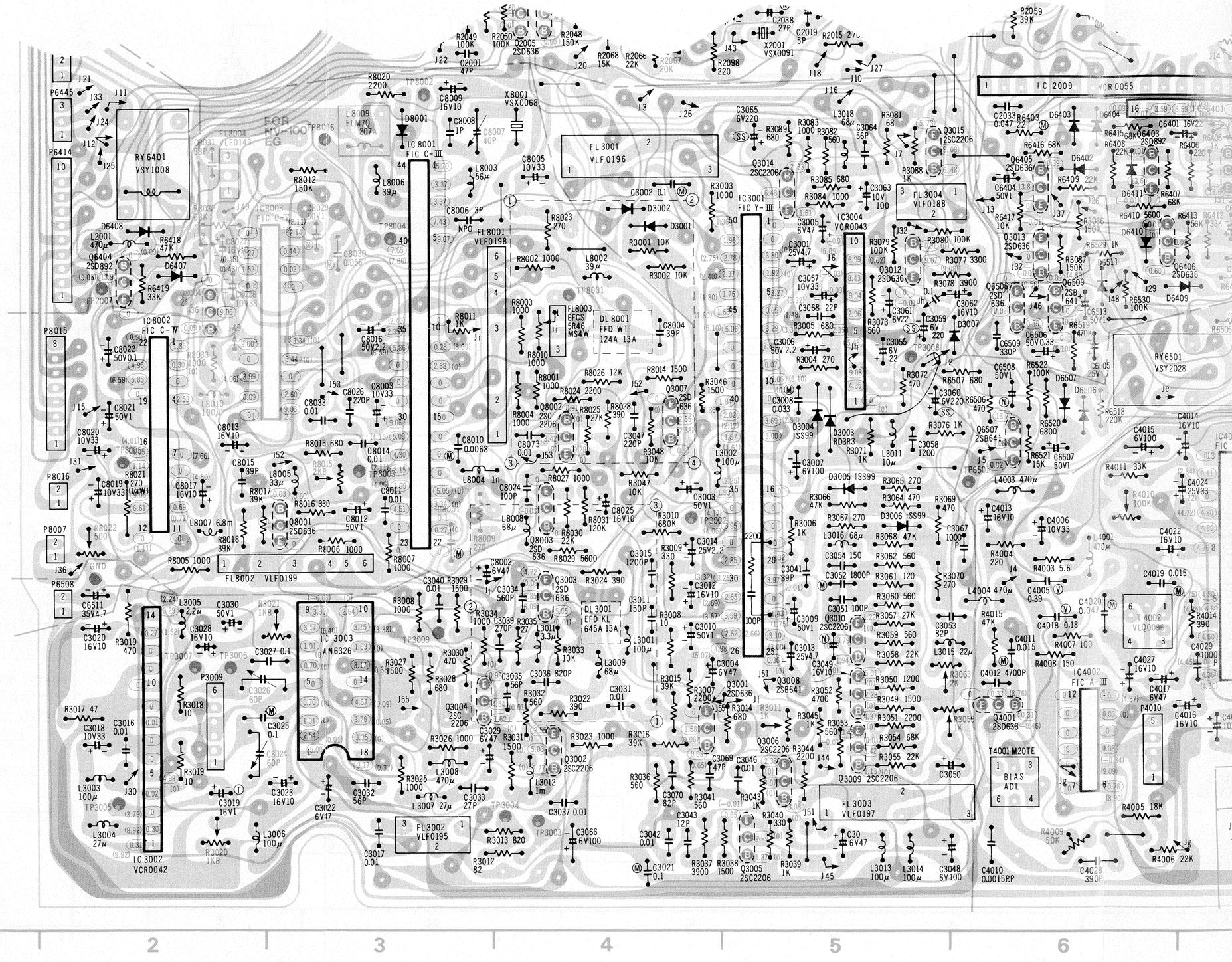

, LOADING MOTOR DRIVE AND JACK PANEL SECTION) P.C.B UNIT

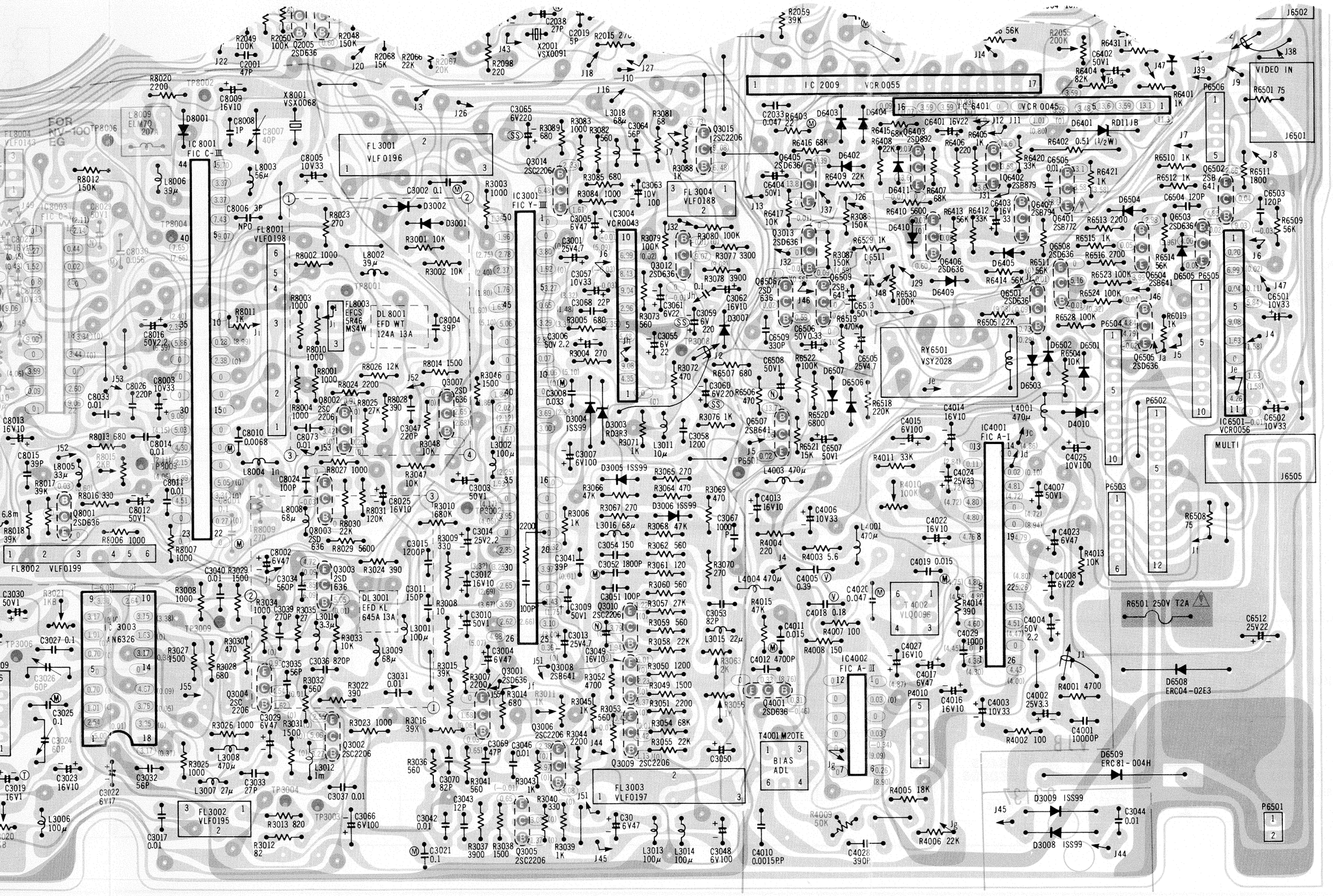

3	CYL POWER	
4	9V	
5	——	
6	TORQUE CONTROL	
7	P G	
8	F G	

P6414

1	TORQUE CONTROL	
2	FULL TORQUE	
3	MOTOR ON	Ⓗ
4	9 V	
5	G N D	
6	R E F. V	
7	C U R R. L I M	
8	E D	
9	E R	
10	C A P POWER	

P6445

1	TRACKING IN	
2	A - D U B	Ⓛ
3	TRACKING OUT	

P6413

1	LOAD MOTOR	⊕
2	LOAD MOTOR	⊖

P2012

1	F G HEAD	
2	G N D	
3	G N D	

JC

1	SPEED FIX	Ⓛ
2	6 H	Ⓗ
3	2^0	Ⓗ
4	2^2	Ⓗ
5	PAUSE RESET	Ⓗ
6	2^3	Ⓗ
7	2/4/6 SW	
8	A. DUB	Ⓛ

JD

1	UNLOADING	Ⓗ
2	LOADING	Ⓗ
3	STOP	Ⓗ
4	SLOW F. ADV	
5	SLOW TRACKING	
6	F W D	Ⓗ
7	R E V E R S E	Ⓗ
8	C Y L LOCK	Ⓗ

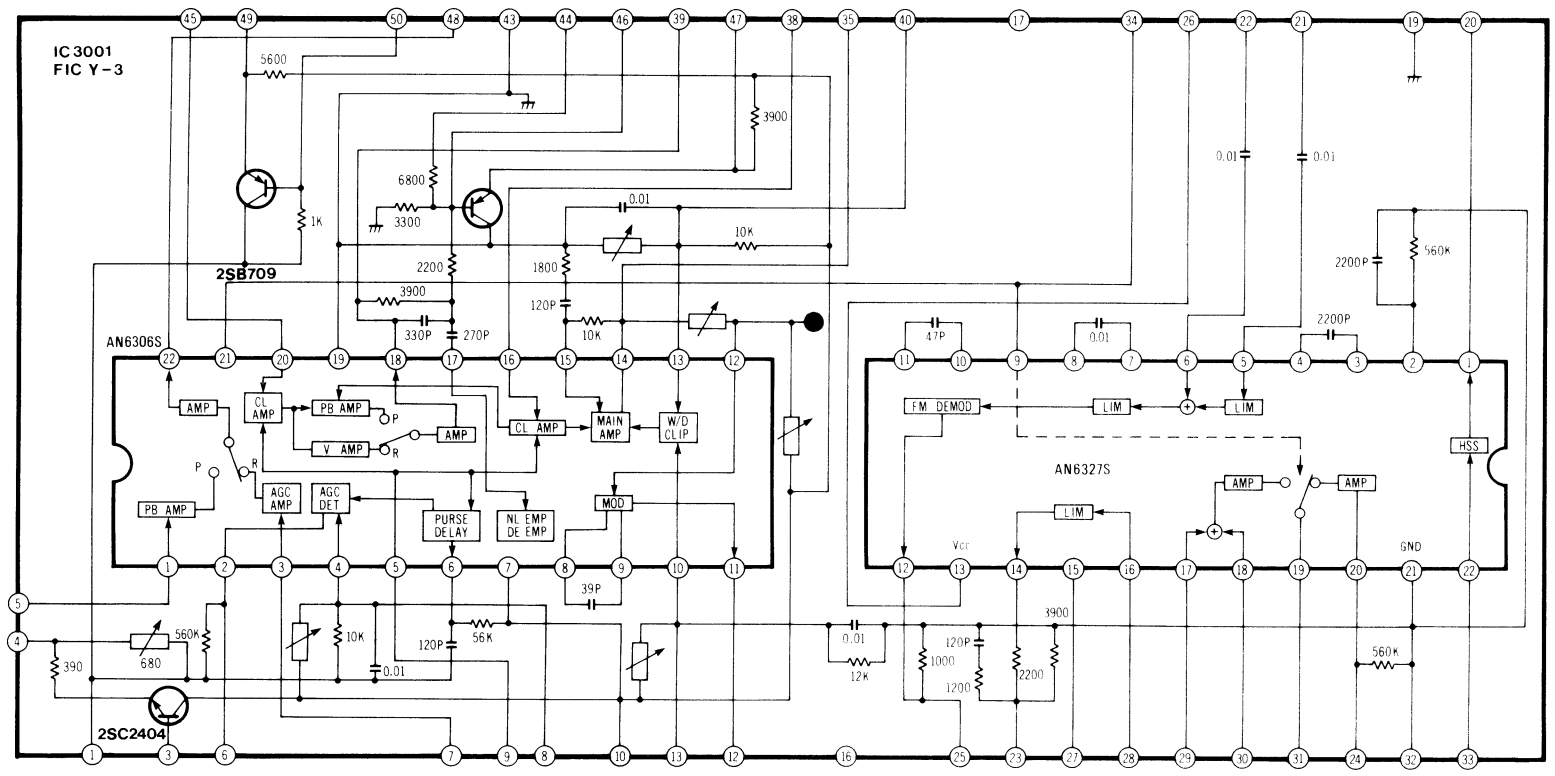

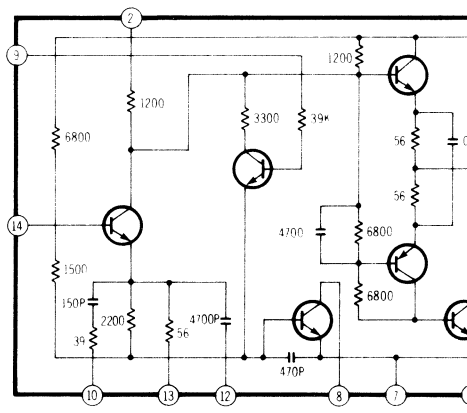

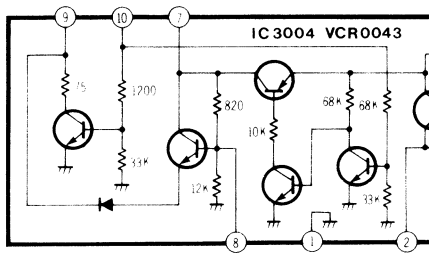

MAIN P.C.B	
Audio Section	
Q4001	A-6
IC4001	B-7
IC4002	A-6

MAIN P.C.B	
Chrominance Section	
Q8001	B-3
Q8002	B-4
Q8003	B-4
Q8004	C-4
IC8001	C-3
IC8002	C-2
IC8003	C-3

MAIN P.C.B	
Luminance Section	
Q3001	A-4
Q3002	A-4
Q3003	B-4
Q3004	A-3
Q3005	A-5
Q3006	A-5
Q3007	C-4
Q3008	A-5
Q3009	A-5
Q3010	A-5
Q3012	C-5
Q3013	D-6
Q3014	C-5
Q3015	D-5
IC3001	C-5
IC3002	A-2
IC3003	A-3
IC3004	C-5

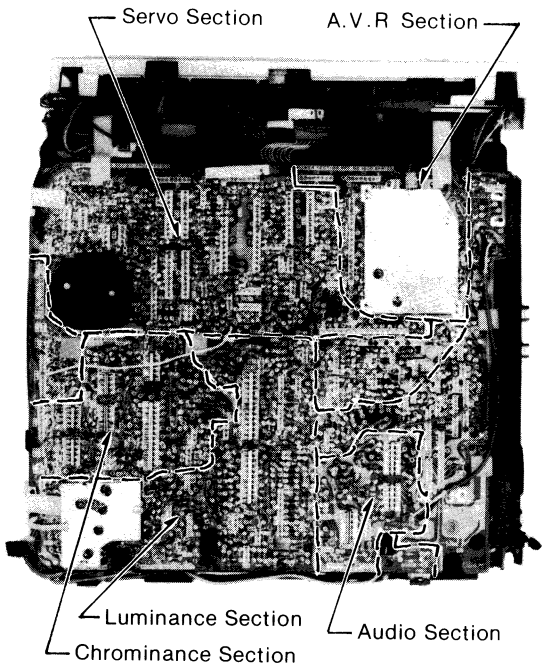

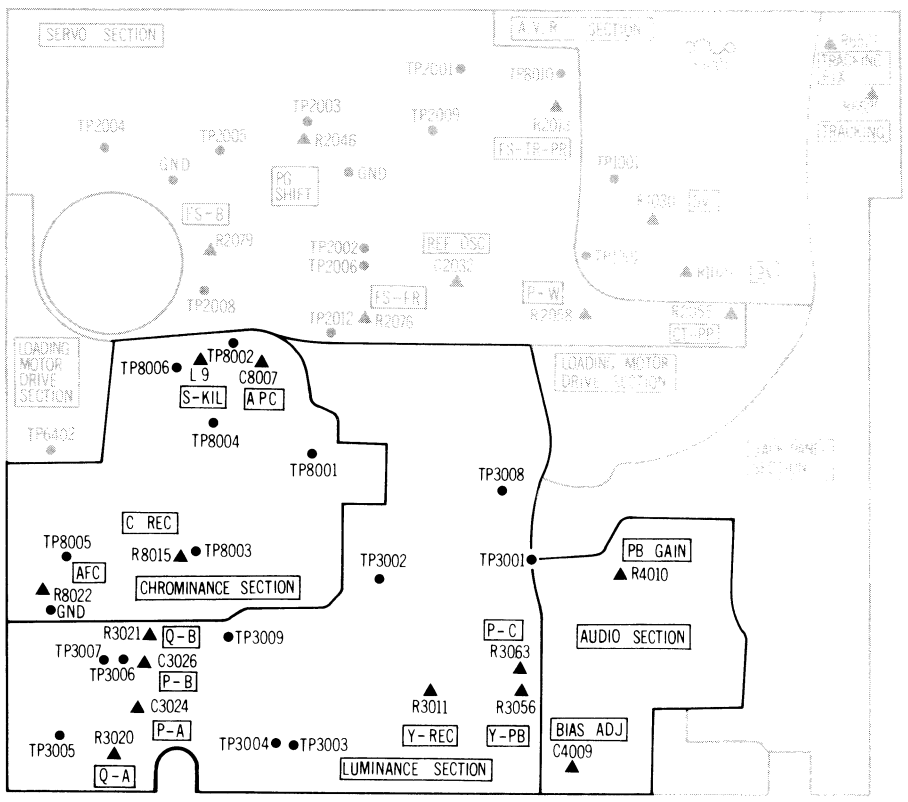

Luminance & Chrominance Schematic	
Q3001	F-9
Q3002	F-14
Q3003	E-13
Q3004	E-13
Q3005	E-9
Q3006	E-8
Q3007	D-9
Q3008	E-11
Q3009	E-11
Q3010	D-11
Q3012	D-5
Q3013	D-4
Q3014	D-4
Q3015	D-4
Q8001	B-10
Q8002	B-11
Q8003	B-12
Q8004	C-13
IC3001	F-5
IC3002	F-11
IC3003	F-13
IC3004	D-7
IC8001	B-6
IC8002	D-13
IC8003	B-13

LUMINANCE & CHROMINANC

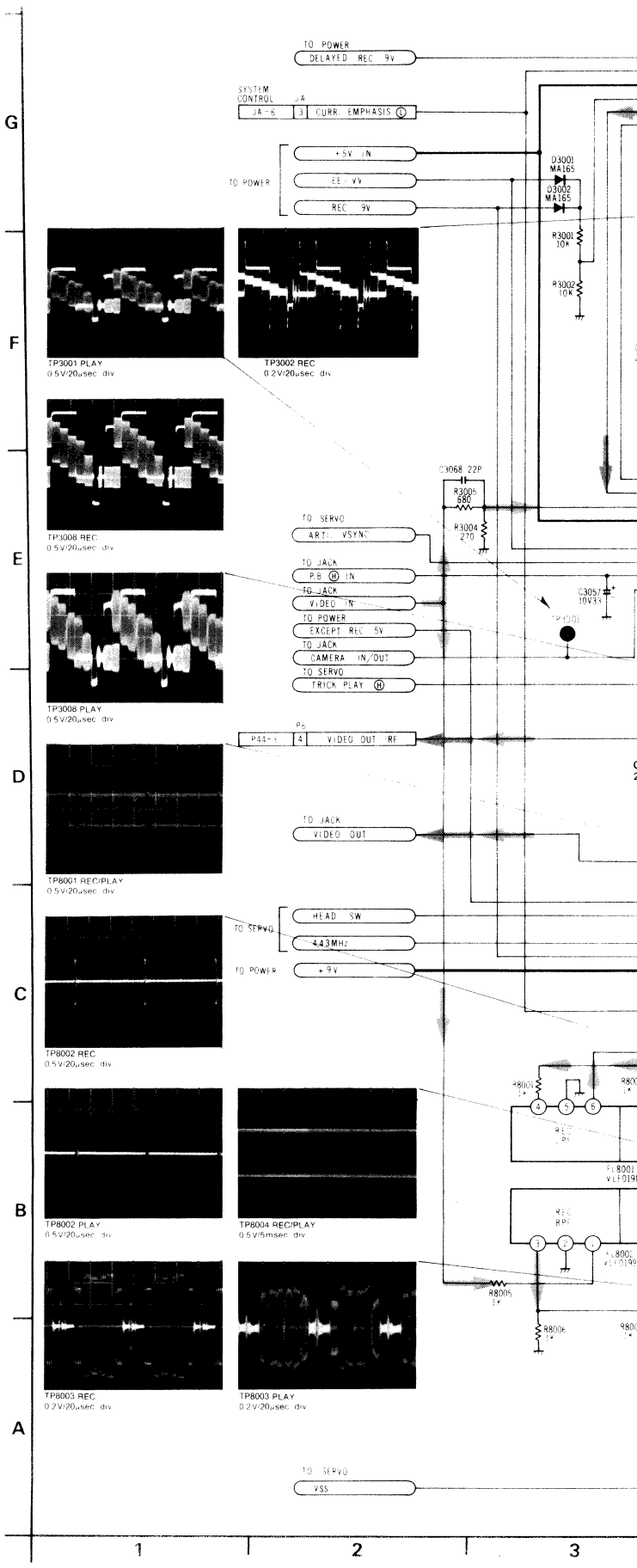

& CHROMINANCE SECTION SCHEMATIC DIAGRAM

THE MEASUREM
THIS DIAGRAM I
THE MEASUREM
DIAGRAM IS PLA

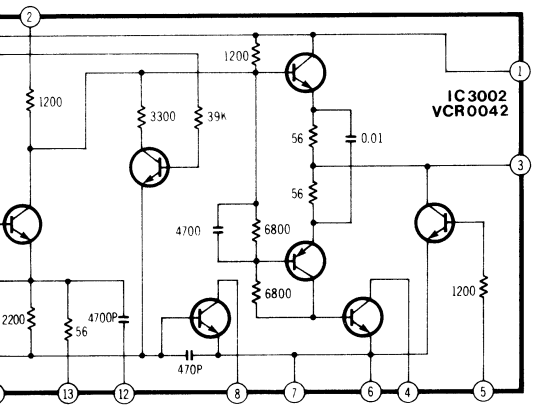

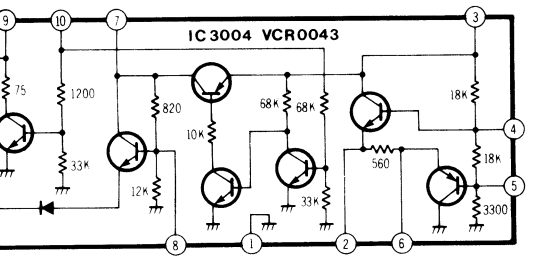

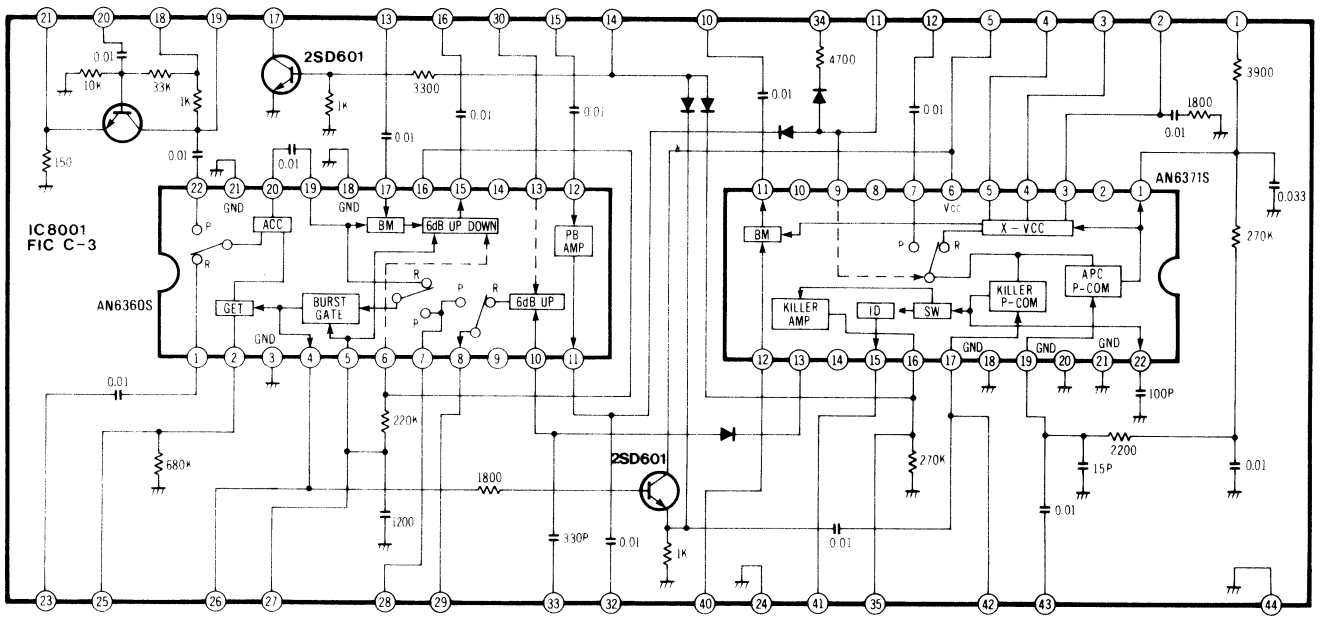

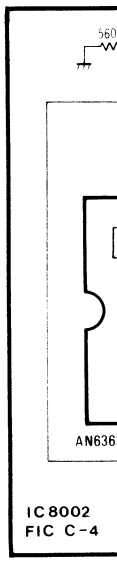

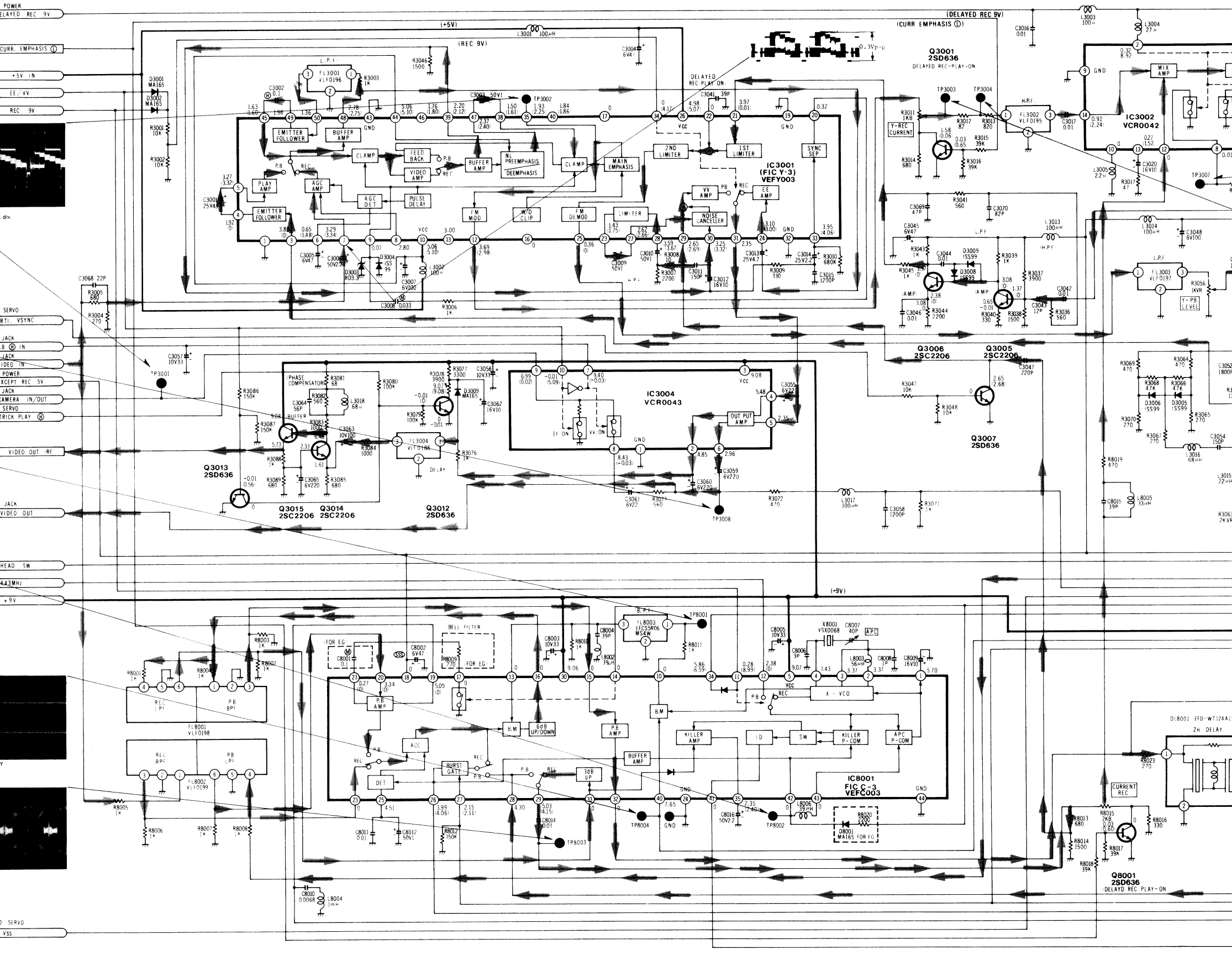

2 3 4 5 6 7 8 9 10

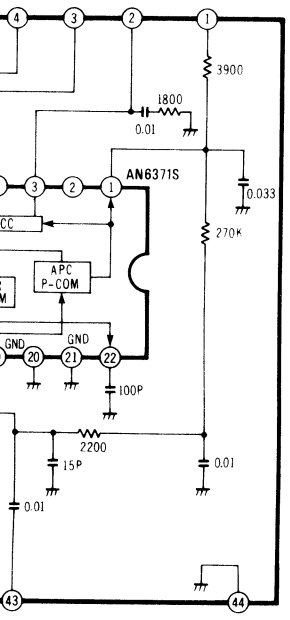

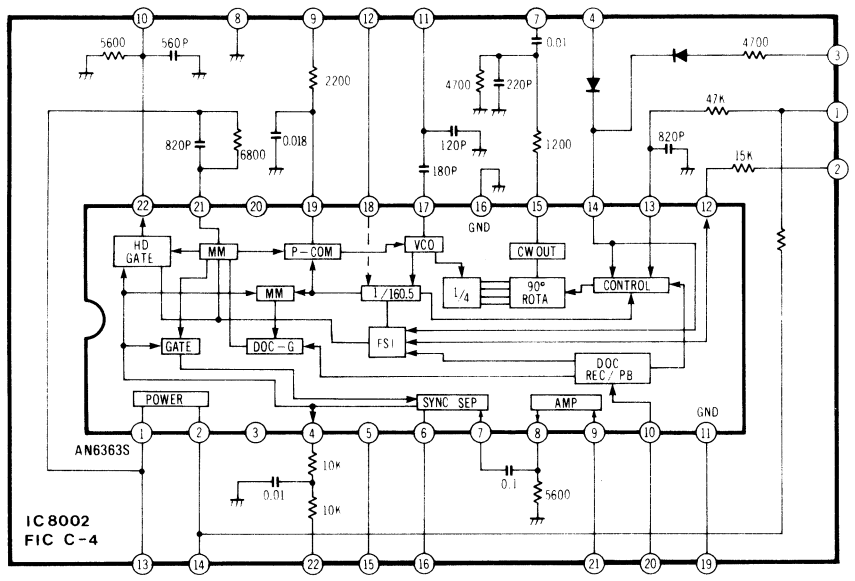

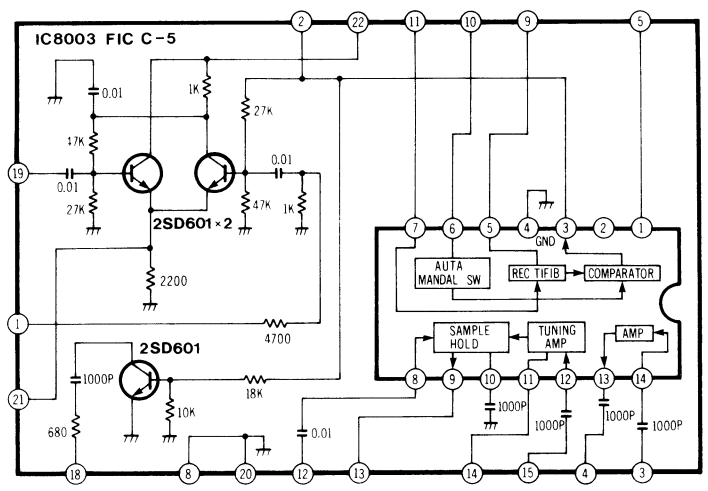

THE MEASUREMENT MODE OF THE DC VOLTAGE IN THE BRAKETS ( ) ON THIS DIAGRAM IS RECORD MODE WITH PAL COLOUR SIGNAL.
THE MEASUREMENT MODE OF THE DC VOLTAGE OUT OF THE BRAKETS ON THIS DIAGRAM IS PLAYBACK MODE WITH PAL COLOUR SIGNAL.

MAIN SIGNAL PATH IN REC MODE.
MAIN SIGNAL PATH IN PLAYBACK MODE.

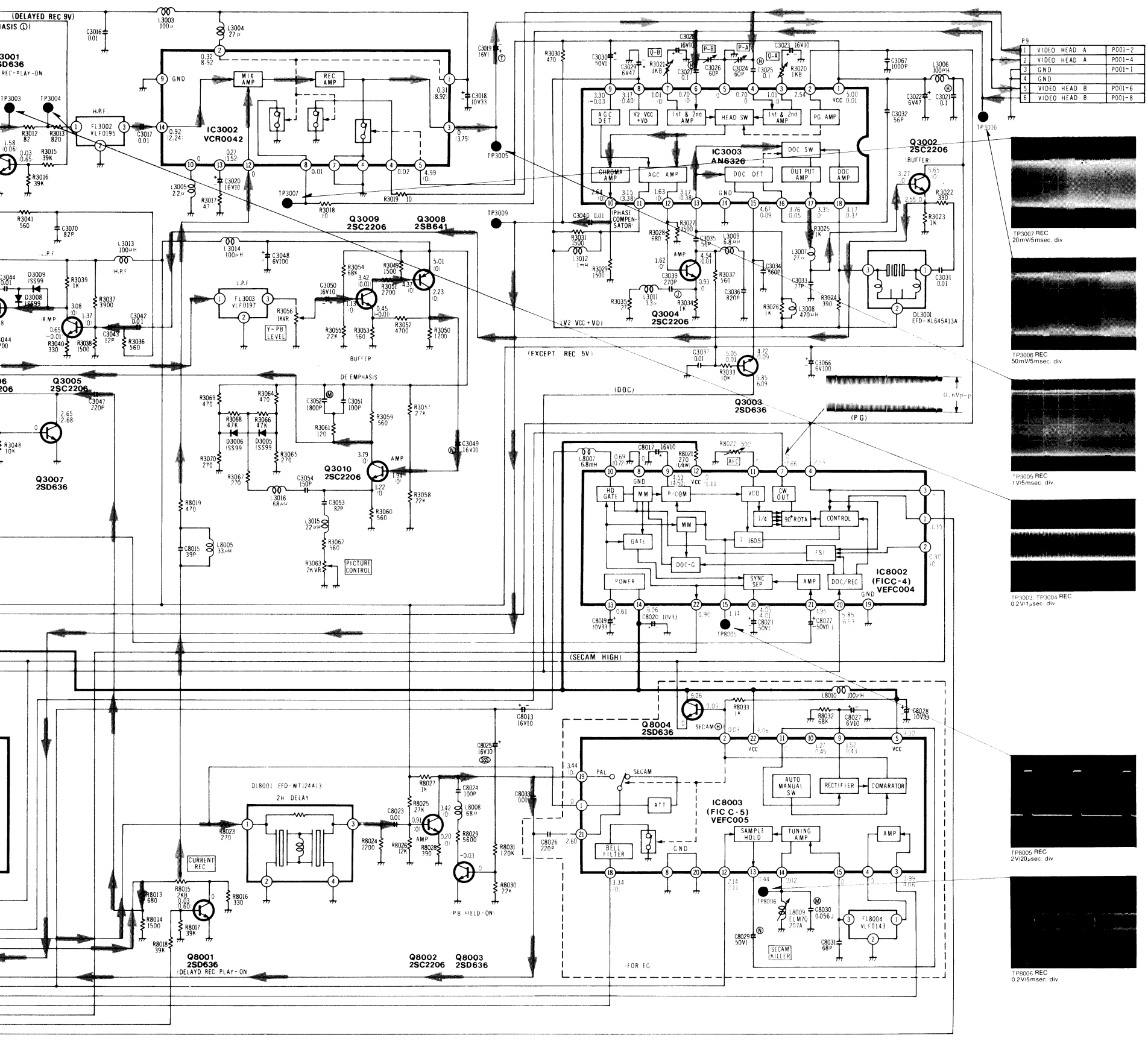

9 10 11 12 13 14 15 16

CYLINDER MOTOR DRIVE SCHEMATIC DIAGRAM

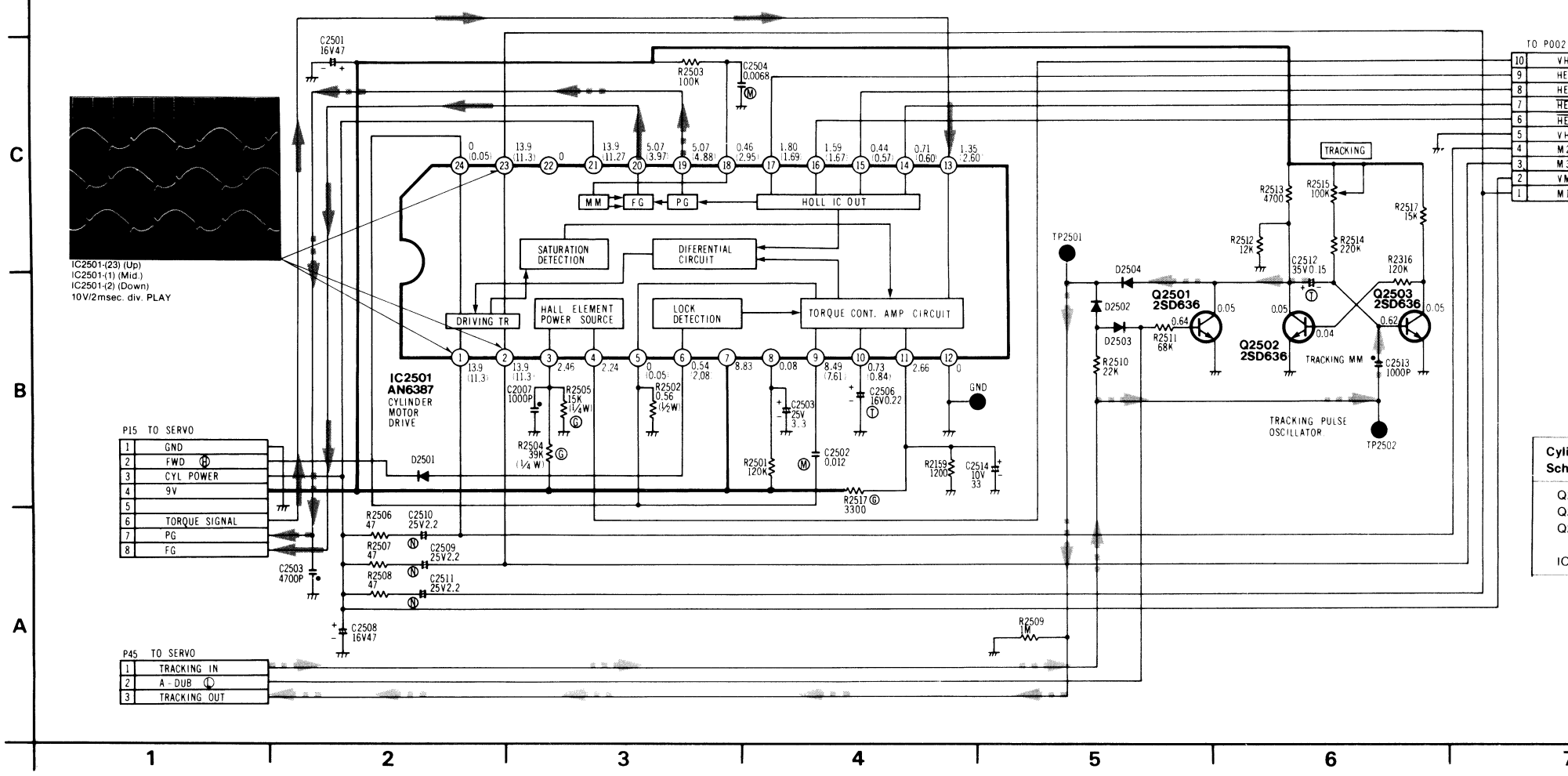

SERVO SECTION SCHEMATIC DIAGRAM

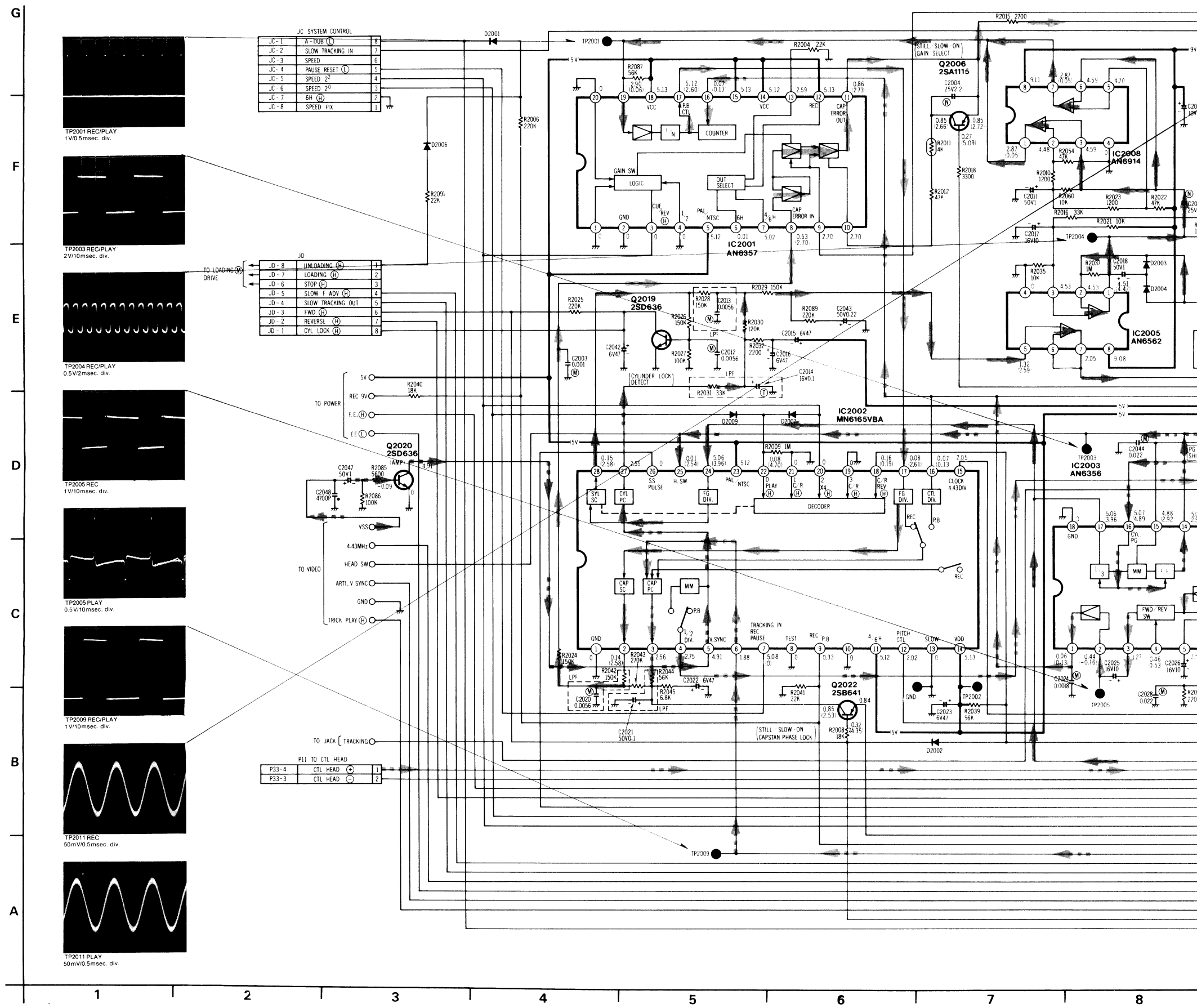

CAPSTAN MOTOR DRIVE SCHEMATIC DIAGRAM

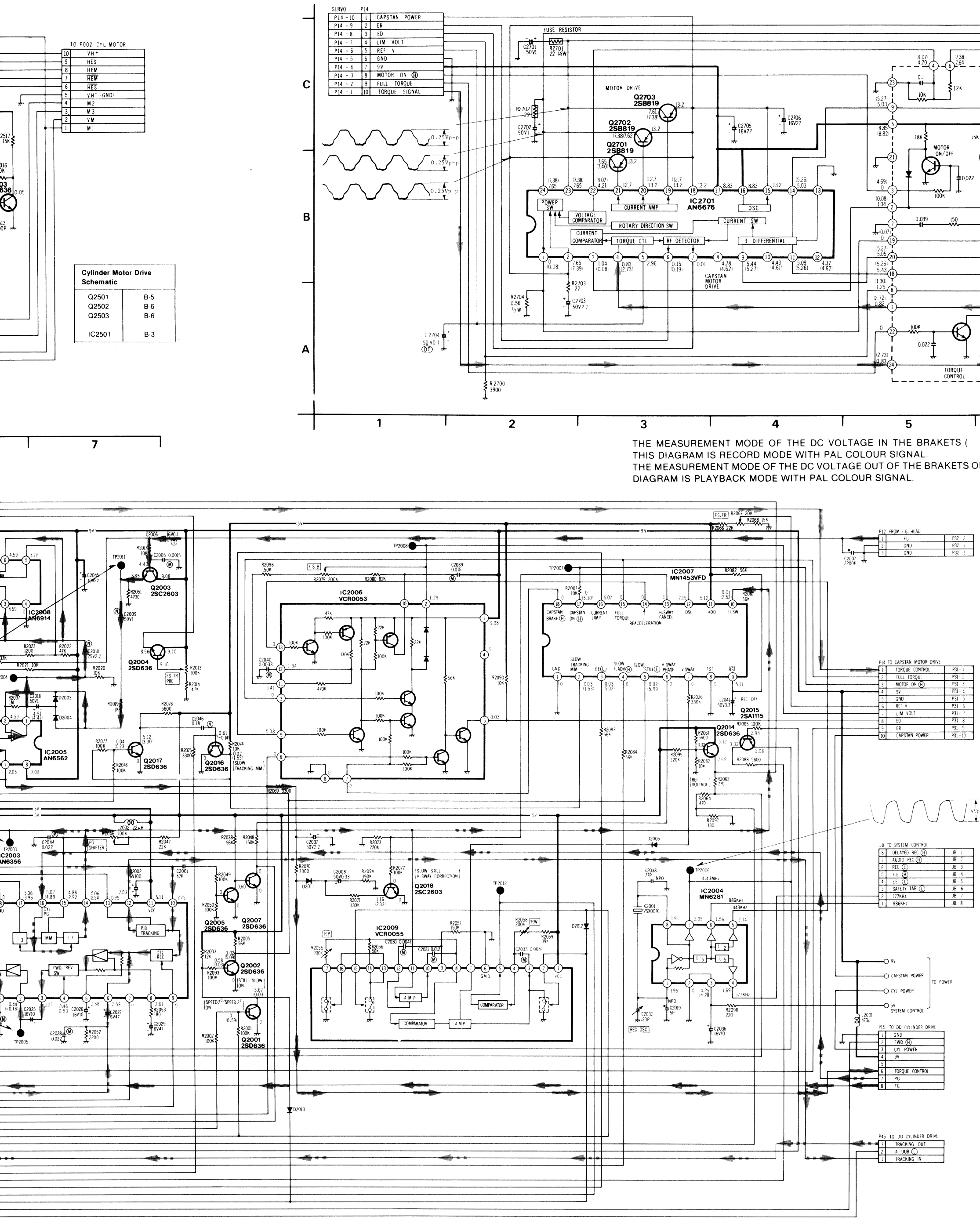

Cylinder Motor Drive Schematic	
Q2501	B-5
Q2502	B-6
Q2503	B-6
IC2501	B-3

THE MEASUREMENT MODE OF THE DC VOLTAGE IN THE BRAKETS (
THIS DIAGRAM IS RECORD MODE WITH PAL COLOUR SIGNAL.
THE MEASUREMENT MODE OF THE DC VOLTAGE OUT OF THE BRAKETS O
DIAGRAM IS PLAYBACK MODE WITH PAL COLOUR SIGNAL.

IC DIAGRAM

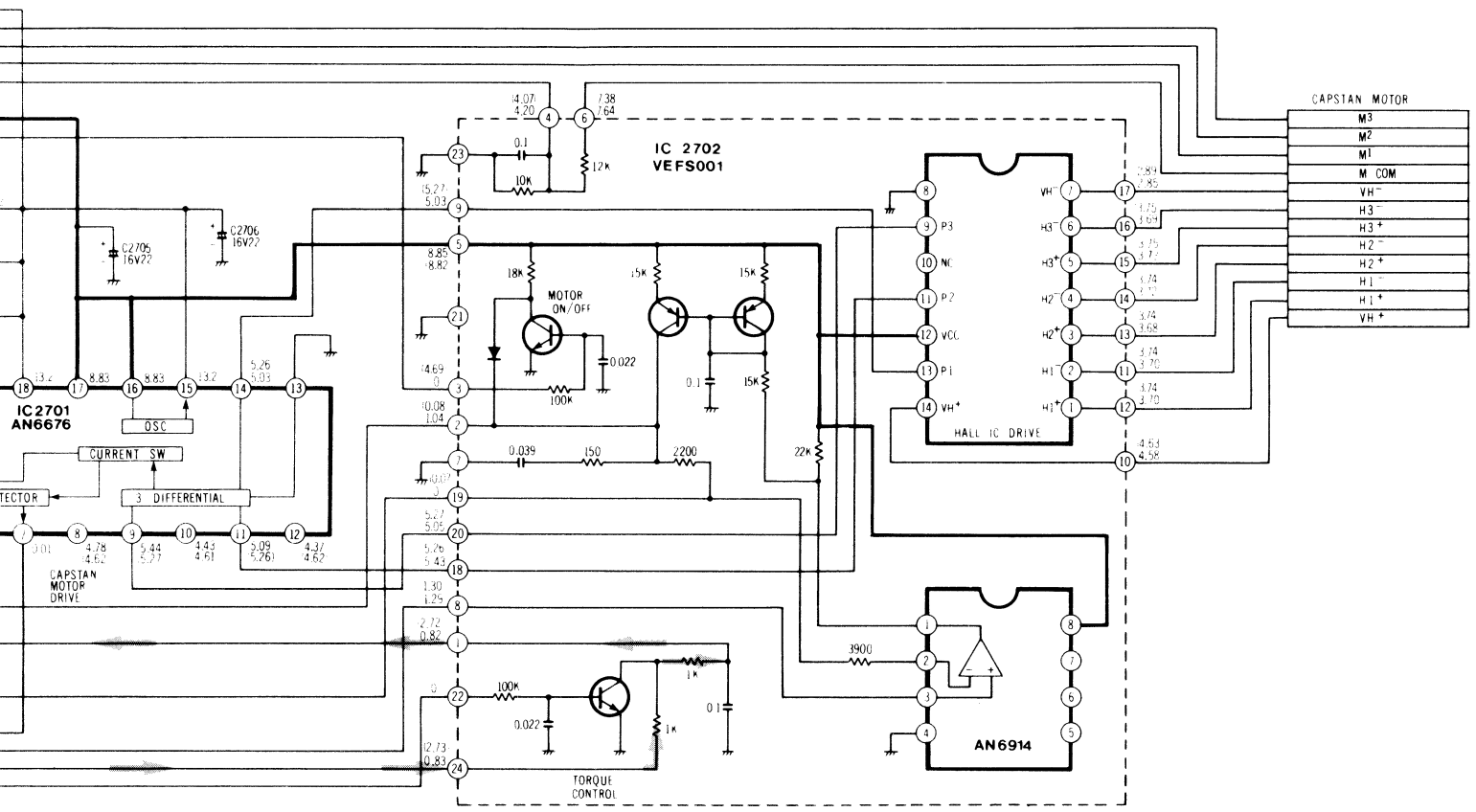

Capstan Motor Drive Schematic	
Q2701	B-3
Q2702	C-3
Q2703	C-3
IC2701	B-3
IC2702	B-6

SUREMENT MODE OF THE DC VOLTAGE IN THE BRAKETS ( ) ON
RAM IS RECORD MODE WITH PAL COLOUR SIGNAL.
UREMENT MODE OF THE DC VOLTAGE OUT OF THE BRAKETS ON THIS
IS PLAYBACK MODE WITH PAL COLOUR SIGNAL.

SPEED LOOP REC MODE.
PHASE LOOP REC MODE.
SPEED LOOP PLAY MODE.
PHASE LOOP PLAY MODE.

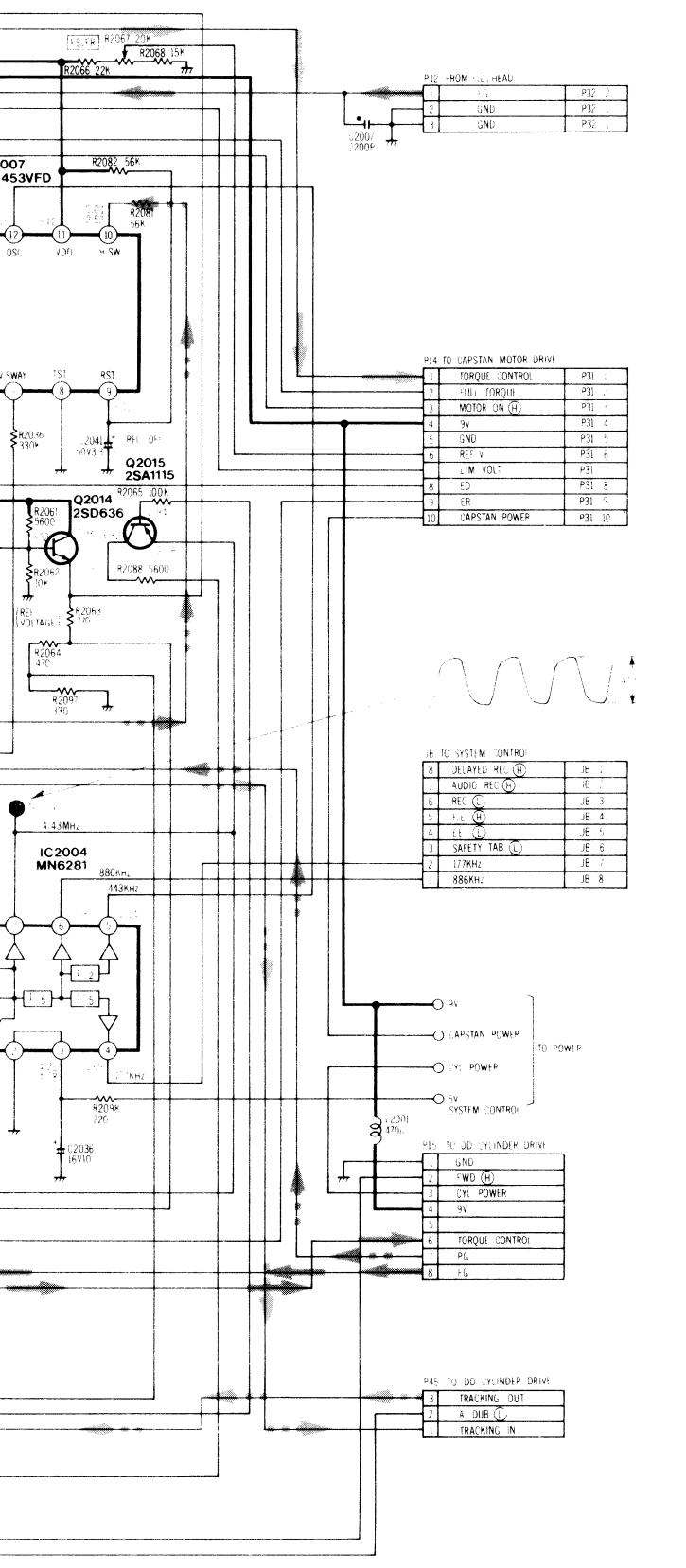

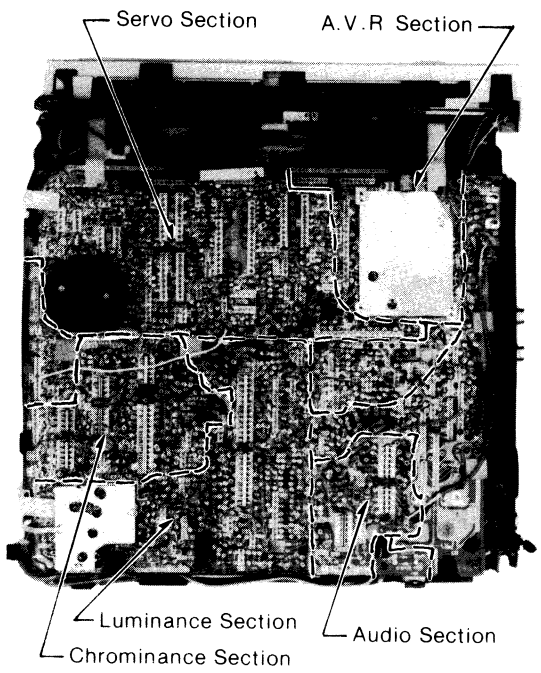

MAIN P.C.B	
Servo Section	
Q2001	E-5
Q2002	E-5
Q2003	E-2
Q2004	F-6
Q2005	D-4
Q2006	E-6
Q2007	D-4
Q2014	F-5
Q2015	E-4
Q2016	E-4
Q2017	E-4
Q2018	F-2
Q2019	F-4
Q2020	E-5
Q2022	E-5
IC2001	F-5
IC2002	F-4
IC2003	F-3
IC2004	E-5
IC2005	F-3
IC2006	E-3
IC2007	E-4
IC2008	F-2
IC2009	D-6

Servo Schematic	
Q2001	C-10
Q2002	C-10
Q2003	F-9
Q2004	E-9
Q2005	C-9
Q2006	F-7
Q2007	D-10
Q2014	E-14
Q2015	E-14
Q2016	D-9
Q2017	D-9
Q2018	C-11
Q2019	D-5
Q2020	D-3
Q2022	B-6
IC2001	F-5
IC2002	C-6
IC2003	C-8
IC2004	C-13
IC2005	D-8
IC2006	E-11
IC2007	E-13
IC2008	F-8
IC2009	C-11

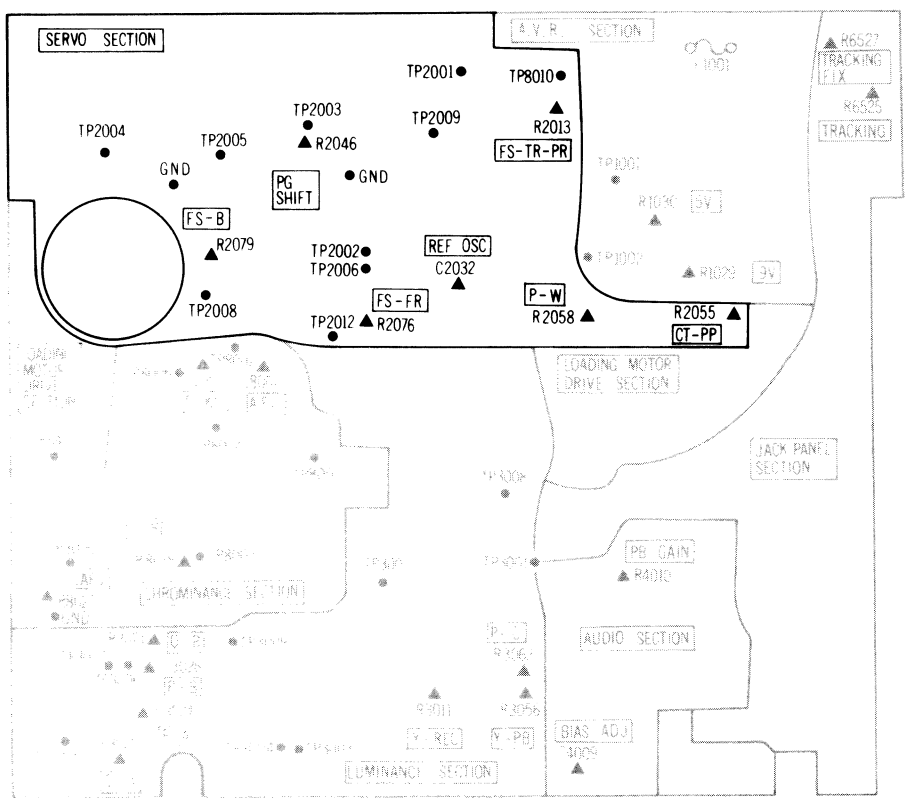

MAIN (A.V.R. AND SERVO SECTION) P.C.B. UNIT

P6501

1	GND
2	12V IN

P6502

1	CLOCK Ⅱ
2	SAFETY TAB
3	CH LOCK
4	GND
5	AUDIO IN
6	SERIAL CODE
7	GND
8	GND
9	VIDEO IN
10	12V
11	HEATER 20V
12	GND

P6503

1	12V IN
2	EXT 12V
3	GND
4	BATT. CHARGE
5	12V OUT
6	12V OUT

P6504

1	SERIAL CODE
2	IC & SERIAL Ⓛ
3	CAMERA IN Ⓛ
4	STAND BY
5	CAMERA PAUSE
6	CLOCK Ⅰ
7	CLOCK Ⅱ
8	SAFETY TAB
9	ANT. SW. CH. LOCK Ⓗ
10	———

P6505

1	SERIAL CODE
2	AUDIO IN
3	GND
4	CAMERA IN/OUT
5	GND
6	GND
7	STAND BY
8	CAMERA PAUSE
9	CLOCK Ⅰ
10	12V OUT

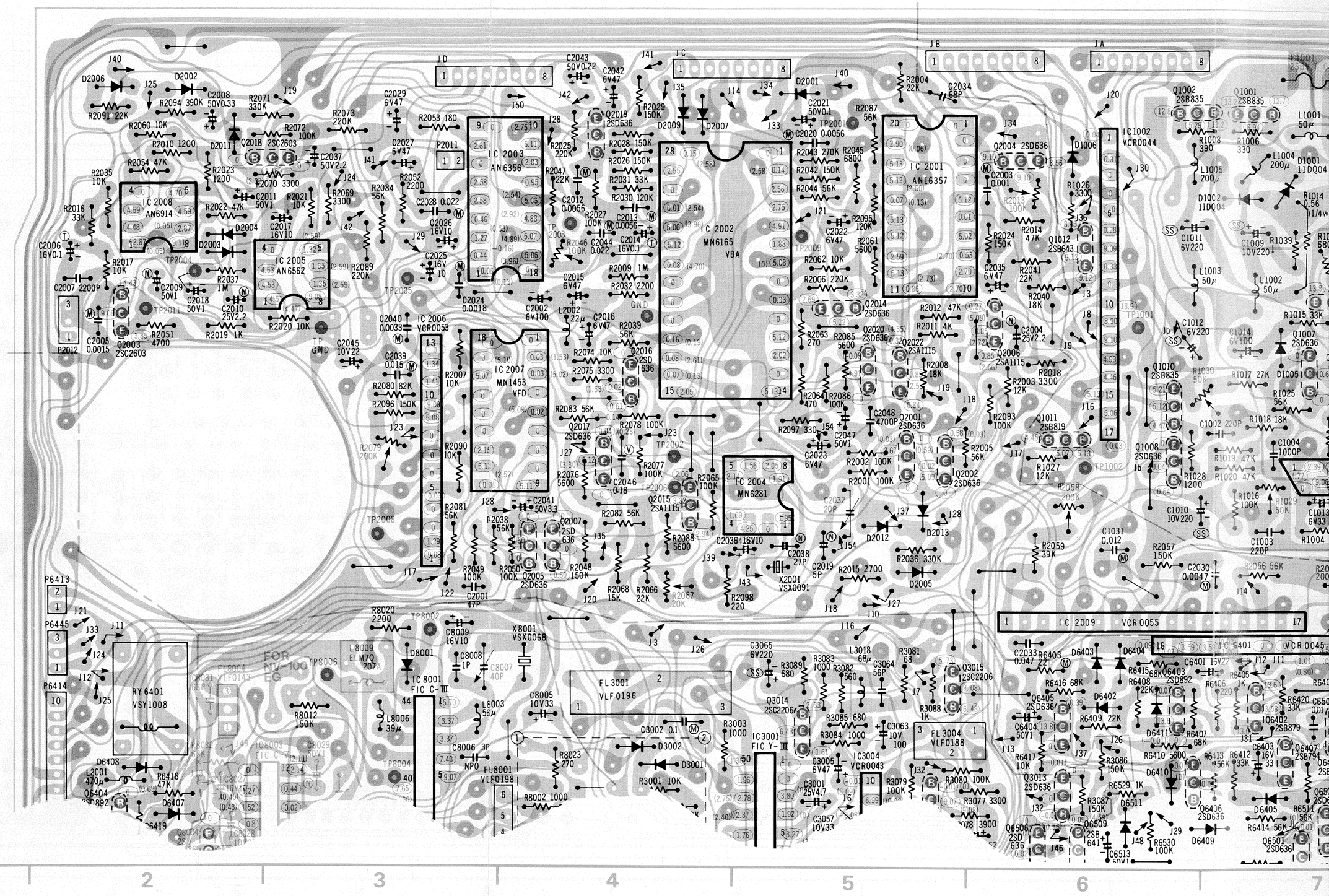

CYLINDER MOTOR DRIVE P.C

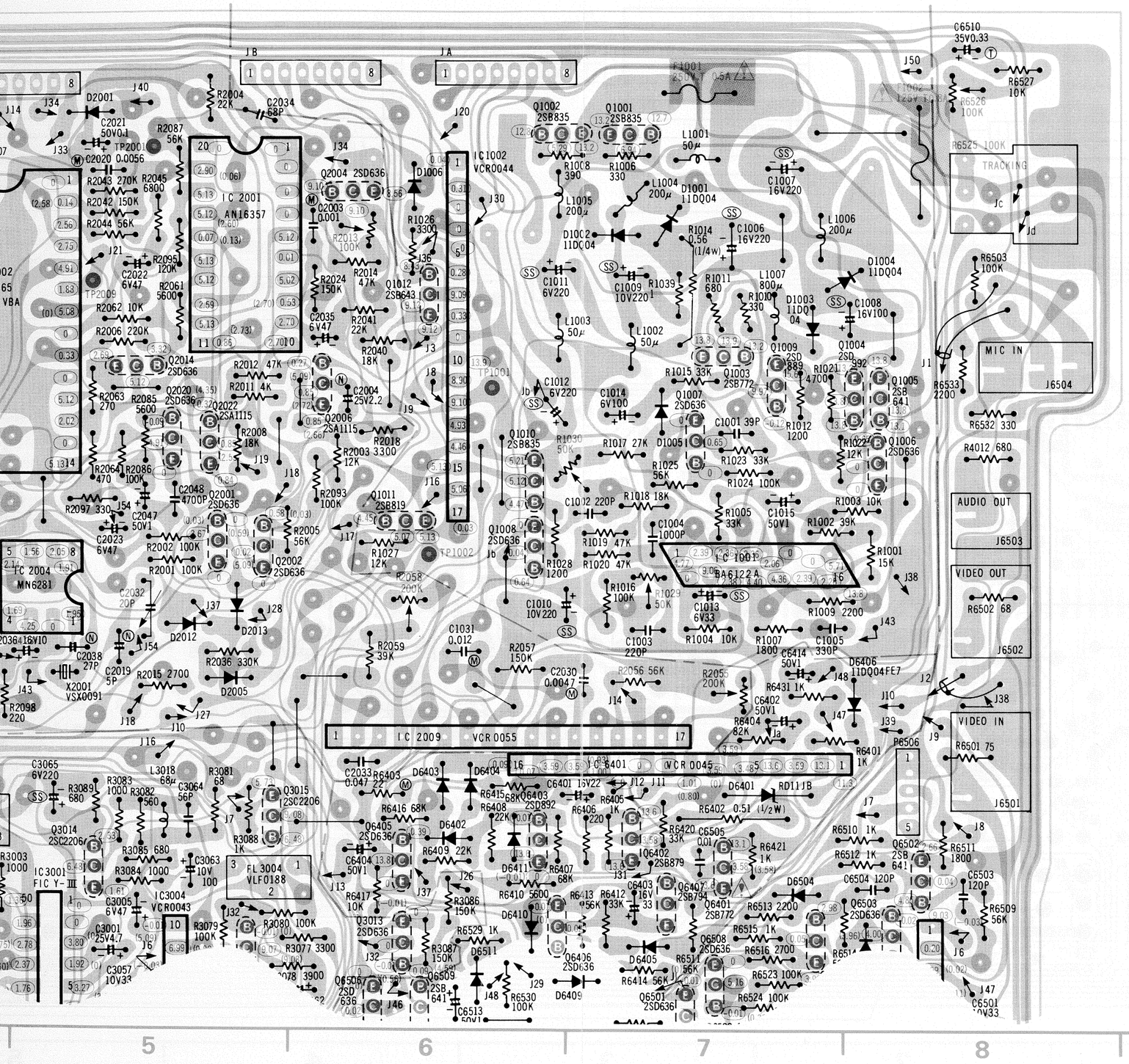

P4010

1	A.E HEAD
2	GND
3	GND
4	AUDIO HEAD (R)
5	AUDIO HEAD (W)

P3009

1	VIDEO (Y)
2	VIDEO (S)
3	GND
4	GND
5	VIDEO (P)
6	VIDEO (W)

P6508

1	HEATER 20V
2	GND

P8007

1	GND
2	F.E 9V

P8016

1	GND
2	LOAD BACK UP

P8015

1	GND
2	FWD Ⓗ
3	CYL POWER
4	9V
5	———
6	TORQUE CONTROL
7	P G
8	F G

P6414

1	TORQUE CONTROL
2	FULL TORQUE
3	MOTOR ON Ⓗ
4	9 V
5	GND
6	REF. V

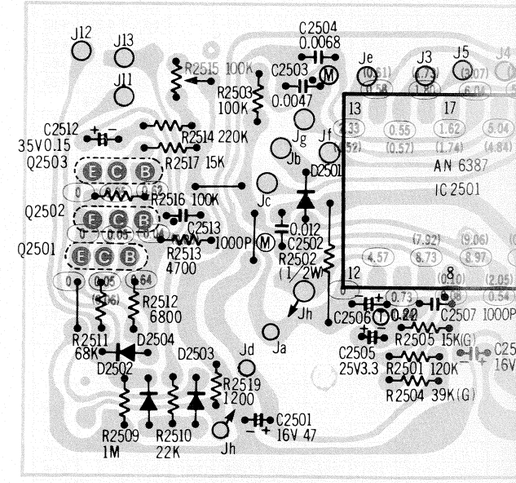

NOTE: UNLESS OTHERWISE SPECIFIED, ALL DIODES A
UNLESS OTHERWISE SPECIFIED, ALL Tr's ARE

CYLINDER MOTOR DRIVE P.C.B. UNIT [VEP02148B]

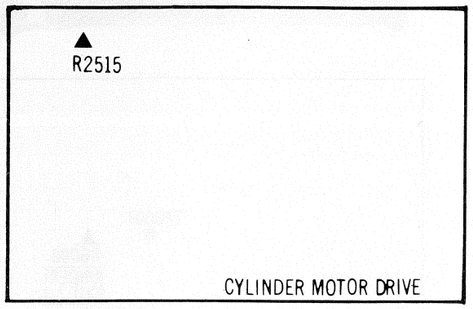

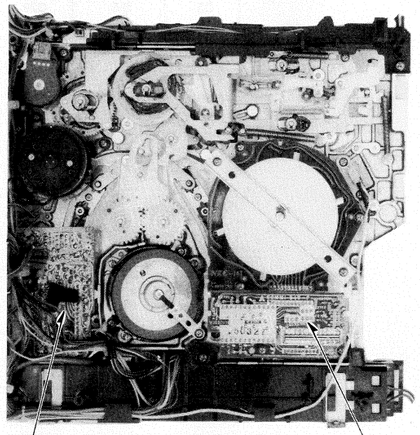

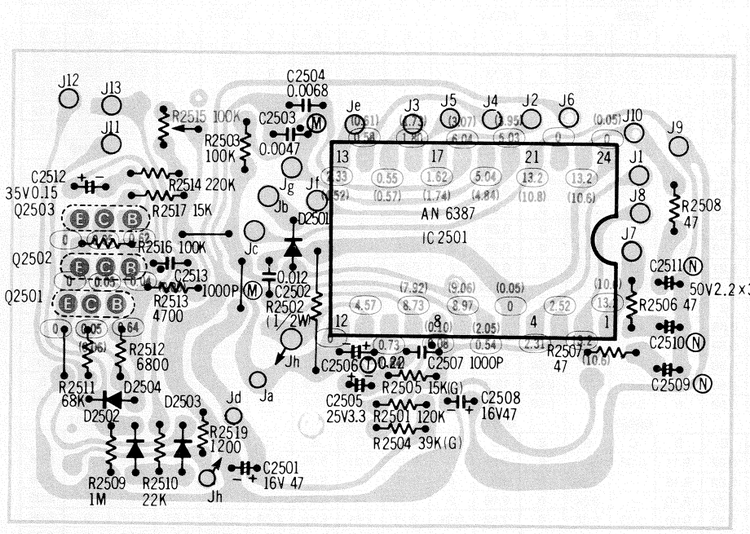

NOTE: UNLESS OTHERWISE SPECIFIED, ALL DIODES ARE MA165
UNLESS OTHERWISE SPECIFIED, ALL Tr's ARE 2SD636

TO P002 CYLINDER MOTOR

(J1)	1	VH+
(J2)	2	HES
(J3)	3	HEM
(J4)	4	$\overline{\text{HEM}}$
(J5)	5	$\overline{\text{HES}}$
(J6)	6	GND
(J7)	7	M2
(J8)	8	M3
(J9)	9	VM
(J10)	10	M1

TO P15 SERVO SECTION

(Ja)	1	GND
(Jb)	2	FWD Ⓗ
(Jc)	3	CYL POWER
(Jd)	4	9V
	5	———
(Je)	6	TORQUE SIGNAL
(Jg)	7	PG
(Jf)	8	FG

TO P45 SERVO SECTION

(J1)	1	TRACKING IN
(J2)	2	A-DUB Ⓛ
(J3)	3	TRACKING OUT

CAPSTAN MOTOR DRIVE P.C.B. UNIT [VEK1475]

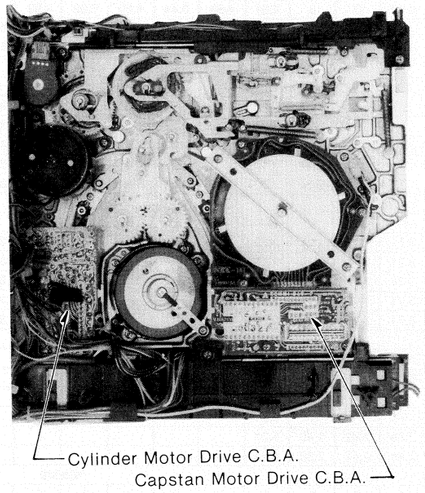

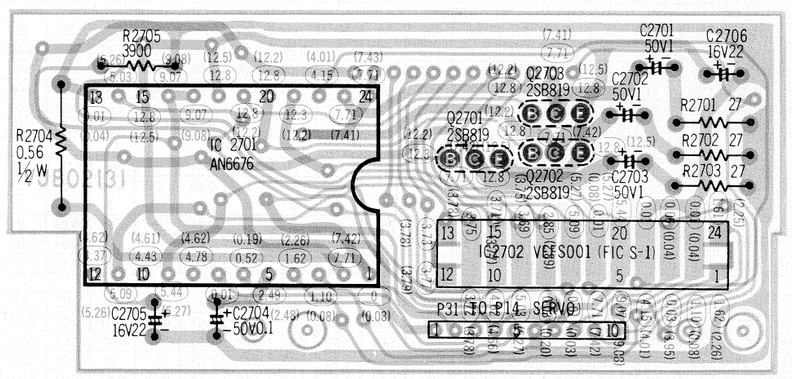

P31 TO P14 SERVO

1	TORQUE INSTRUCTION
2	FULL TORQUE
3	MOTOR ON Ⓗ
4	9 V
5	G N D
6	REF. V
7	CURR LIM.
8	E D
9	E R
10	CAP. POWER

SYSTEM CONTROL ICs VOLTAGE CHART

REF. NO.	IC6001																			
MODE	1	2	3	4	5	6	7	8	9	10	11	12	13	14	15	16	17	18	19	20
STOP	0	0	0	4.80	4.93	0.38	4.80	0.02	4.92	0	0	0.22	—	—	5.21	5.09	5.21	0	0	5.18
PLAY	0.02	0	0	4.80	4.98	0.46	4.80	0.02	4.92	0	0	0.22	—	—	5.21	5.08	5.20	0	0	5.18
REC	0.02	0	0	4.81	4.98	0.44	4.80	0.02	4.93	0	0	0.22	—	—	5.21	5.07	5.21	0	0	5.19
F.F	0	0	0	4.80	4.95	0.32	4.80	0.02	4.92	5.07	0	5.19	—	—	5.21	5.07	5.21	0	0	5.18
REW	0.03	0	0	4.80	4.92	—	4.80	0.02	4.92	5.07	0	5.19	—	—	5.21	5.07	5.21	0	0	5.19

REF. NO.	IC6001																			
MODE	21	22	23	24	25	26	27	28	29	30	31	32	33	34	35	36	37	38	39	40
STOP	0	0	2.27	3.21	4.21	5.21	3.70	3.72	3.72	3.72	3.72	3.72	3.72	3.72	3.72	3.72	3.72	3.72	3.72	3.72
PLAY	0	0	2.25	3.20	4.20	5.21	3.70	3.72	3.72	3.72	3.71	3.71	3.70	3.71	3.71	3.71	3.72	3.72	3.72	3.72
REC	0	0	2.25	3.20	4.20	5.21	3.70	3.72	3.72	3.71	3.72	3.72	3.71	3.71	3.71	3.71	3.72	3.72	3.72	3.72
F.F	0	0	2.24	3.19	4.20	5.21	0.03	3.72	3.72	3.71	3.71	3.70	3.70	3.71	3.71	3.71	3.71	3.70	3.70	3.71
REW	0	0	2.24	3.20	4.20	5.21	3.69	3.71	3.71	3.72	3.70	3.70	3.70	3.71	3.70	3.71	3.71	3.70	3.70	3.71

REF. NO.	IC6001																			
MODE	41	42	43	44	45	46	47	48	49	50	51	52	53	54	55	56	57	58	59	60
STOP	3.71	3.75	3.74	3.74	3.75	3.74	3.74	3.75	3.74	3.74	3.75	3.73	3.75	3.74	0	0	1.70	5.21	3.15	0
PLAY	3.71	3.73	3.74	3.73	3.74	3.71	3.75	3.75	3.72	3.75	3.74	3.73	3.74	3.74	0	0	1.70	5.21	3.15	0
REC	3.71	3.73	3.74	3.74	3.74	3.72	3.75	3.75	3.70	3.70	3.73	3.74	3.75	3.73	0	0	1.71	5.21	3.15	0
F.F	3.71	3.73	3.70	3.74	3.73	3.71	3.74	3.72	3.71	3.74	3.74	3.72	3.73	3.73	0	0	1.70	5.21	3.15	0
REW	3.71	3.73	3.71	3.74	3.74	3.73	3.74	3.73	3.72	3.74	3.75	3.72	3.73	3.97	0	0	1.70	5.21	3.15	0

REF. NO.	IC6001																			
MODE	61	62	63	64																
STOP	5.14	4.96	4.95	5.21																
PLAY	—	—	—	5.21																
REC	—	—	—	5.21																
F.F	2.49	2.42	2.40	5.21																
REW	2.49	2.41	2.38	5.21																

REF. NO.	IC6002																			
MODE	1	2	3	4	5	6	7	8	9	10	11	12	13	14	15	16	17	18	19	20
STOP	0	0	0	5.08	0	0.04	5.08	0	0	5.03	5.06	4.35	4.26	0	0	0	0	0.42	1.26	1.13
PLAY	0	0	0	5.08	0	0.04	5.08	0.12	0	5.03	5.05	4.34	4.25	0	0	0	0	3.46	4.30	4.17
REC	0	0	0	5.07	0	0.04	5.06	0	0	5.01	5.03	4.33	4.23	0	0	0	0	3.44	4.29	0.93
F.F	0	0	0	5.07	0	0.04	5.07	0	0	5.02	5.04	4.31	4.32	0	0	0	0	0.28	1.05	4.23
REW	0	0	0	5.07	0	0.04	5.07	0	0	5.02	5.04	4.31	4.31	0	0	0	0	0.28	1.05	4.23

REF. NO.	IC6002																			
MODE	21	22	23	24	25	26	27	28	29	30	31	32	33	34	35	36	37	38	39	40
STOP	4.93	0	0	0.17	0.17	0	5.14	5.09	4.80	0	0	5.08	0.02	5.08	5.06	4.94	5.04	5.09	5.09	1.56
PLAY	4.95	0.02	1.35	0.17	0.12	0	5.14	5.08	4.80	0	0	5.08	5.08	5.08	0.02	4.93	5.04	5.08	5.08	1.57
REC	4.95	0.03	1.35	0.17	0.12	0	5.13	5.06	4.80	0	0	5.06	5.07	5.06	0.02	0.03	5.02	5.06	5.07	1.57
F.F	4.95	0.04	1.31	0.17	0.12	0	5.13	5.07	4.80	0	0	5.07	5.07	0	5.04	4.92	5.03	5.07	5.07	1.57
REW	4.93	0.02	1.30	0.17	0.14	0	5.13	5.07	4.80	0	0	0.01	5.07	5.07	5.04	4.92	5.02	5.07	5.07	1.57

REF. NO.	IC6003																			
MODE	1	2	3	4	5	6	7	8	9	10	11	12	13	14	15	16	17	18	19	20
STOP	0	4.95	0.04	0	0	0	5.08	4.96	0	0	0	0	0	0.49	0	5.08	0	0	0	0
PLAY	0	0	0.04	0	0	5.08	0	0.07	0	0	0	0	0	0.49	0	0	0	0	0	0
REC	0	4.94	4.99	5.00	5.00	5.06	5.06	0	0	0	0	0	0	0.44	0	0	0.03	0	0	0
F.F	0	4.93	0.04	0	0	5.07	5.07	4.94	0	5.07	0	4.79	0	0.41	0	0	0.04	0	0	0
REW	0	4.93	0.04	0	0	5.06	5.06	4.94	0	5.06	0	4.80	0	0.48	0	5.06	0.12	0	0	0

REF. NO.	IC6003																			
MODE	21	22	23	24	25	26	27	28	29	30	31	32	33	34	35	36	37	38	39	40
STOP	0	0	0	0.07	0.06	0	5.14	5.08	4.80	5.09	1.75	1.75	1.74	0.03	0.01	0.01	0.01	0.01	5.08	1.57
PLAY	5.21	0	5.04	0.07	0.07	0	5.14	5.08	4.80	5.08	5.07	5.07	5.07	5.05	5.08	0.01	0.01	0.01	5.08	1.57
REC	5.21	0.01	5.03	0.07	0.07	0	5.13	5.06	4.80	5.07	1.38	5.06	5.06	0.03	0	0	0.01	0.01	5.07	1.58
F.F	0.01	0.01	0.01	0.08	0.08	0	5.13	5.07	4.80	5.07	5.06	1.56	1.56	0.03	0.01	0.61	0.61	0.61	5.07	1.57
REW	0.01	5.04	0.01	0.08	0.08	0	5.13	5.07	4.80	5.07	5.06	1.57	1.56	0.03	0.01	0.61	0.61	0.61	5.07	1.57

REF. NO.	IC6004															
MODE	1	2	3	4	5	6	7	8	9	10	11	12	13	14	15	16
STOP	5.07	0	1.13	5.21	1.28	5.22	0.43	0	4.94	0.61	4.94	4.80	1.14	5.18	4.36	5.10
PLAY	5.05	0	4.18	5.21	4.31	5.22	3.47	0	4.99	0.61	4.99	—	4.18	5.17	4.36	5.10
REC	5.05	0	0.93	5.22	4.30	5.22	3.45	0.01	4.99	0.61	4.99	—	0.93	5.18	4.34	5.07
F.F	5.05	0.01	4.24	5.22	1.05	5.22	0.29	0.01	4.96	0.61	4.96	—	4.24	5.17	4.32	5.08
REW	5.05	0.01	4.24	5.21	1.06	5.22	0.29	0.01	4.94	0.61	4.94	—	4.24	5.17	4.32	5.08

REF. NO.	IC6005															
MODE	1	2	3	4	5	6	7	8	9	10	11	12	13	14	15	16
STOP	4.27	0.61	0.43	4.84	4.94	0.60	1.14	0	1.27	5.16	0.43	0.03	1.27	0	4.36	5.10
PLAY	4.26	0.61	3.47	—	4.99	0.60	4.18	0	4.31	5.16	3.47	0.04	4.31	0	4.36	5.09
REC	4.24	0.61	3.45	—	4.99	0.60	0.93	0.01	4.30	5.17	3.45	0.04	4.30	0	4.34	5.08
F.F	4.33	0.61	0.29	—	4.97	0.60	4.24	0.01	1.06	5.17	0.28	0.04	1.05	0.01	4.32	5.08
REW	4.33	0.61	0.29	—	4.94	0.60	4.24	0.01	1.06	5.17	0.29	0.04	1.06	0.01	4.32	5.08

REF. NO.	IC6006							
MODE	1	2	3	4	5	6	7	8
STOP	4.93	0.02	0.72	0	4.92	—	5.21	13.9
PLAY	4.93	0.02	0.72	0	4.91	—	5.21	13.8
REC	4.93	0.02	0.72	0	4.92	—	5.22	13.9
F.F	4.93	0.02	0.72	0	4.91	—	5.21	13.8
REW	4.93	0.02	0.72	0	4.91	—	5.21	13.8

System Control C.B.A			
Q1	A-3	Q25	B-3
Q2	B-3	Q26	B-5
Q3	A-5	Q27	B-5
Q4	A-4	Q28	B-4
Q5	B-5	Q29	C-5
Q6	B-5	Q30	C-5
Q7	B-4	Q31	C-4
Q8	B-8	Q32	C-4
Q9	B-8	Q33	B-5
Q10	B-2	Q34	A-1
Q12	B-7	Q35	B-5
Q13	B-7	Q36	C-6
Q14	B-8	Q37	C-6
Q15	B-8	Q39	B-3
Q16	B-7	Q40	B-7
Q17	B-7	Q41	C-8
Q18	B-8		
Q19	B-8	IC1	A-7
Q20	A-8	IC2	B-1
Q21	A-8	IC3	C-2
Q22	C-7	IC4	A-2
Q23	B-7	IC5	A-2
Q24	C-7		

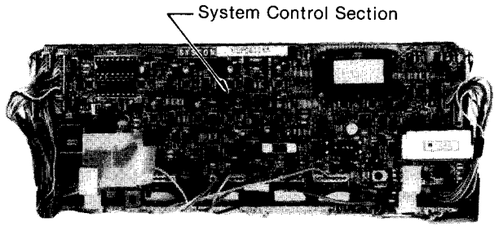

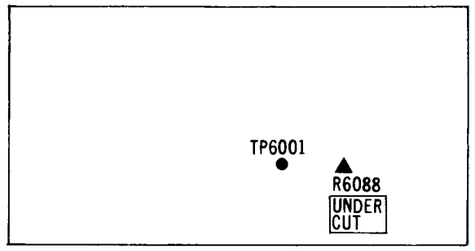

SYSTEM CONTROL TRANSISTORs VOLTAGE CHART

REF. NO.	Q6001			Q6002			Q6003			Q6004			Q6005			Q6006		
MODE	E	C	B	E	C	B	E	C	B	E	C	B	E	C	B	E	C	B
STOP	4.48	0.09	5.07	5.21	5.14	4.50	4.48	0.14	5.07	5.21	0.02	5.13	4.50	0.12	5.07	4.50	−0.83	5.03
PLAY	4.48	−0.28	5.06	5.21	−0.27	5.14	4.48	−0.50	5.06	5.21	5.15	4.51	4.48	−0.29	5.06	4.48	−0.31	5.02
REC	3.95	0.31	5.05	5.22	0.22	5.13	3.96	0.29	5.05	5.22	5.15	4.52	3.96	3.87	3.27	3.95	−0.34	5.01
F.F	3.96	0.35	5.05	5.21	−0.35	5.13	3.96	3.89	3.27	5.21	0.01	5.11	3.96	0.23	5.05	3.96	−0.28	5.01
REW	3.96	3.90	3.27	5.21	−0.33	5.13	3.96	0.30	5.05	5.22	0.02	5.12	3.95	0.09	5.06	3.95	−0.23	5.01

REF. NO.	Q6007			Q6008			Q6009			Q6010			Q6012			Q6013		
MODE	E	C	B	E	C	B	E	C	B	E	C	B	E	C	B	E	C	B
STOP	4.47	−0.55	5.07	5.21	0	5.19	0	5.14	0	0	4.80	0.02	0	4.80	—	5.21	5.21	4.53
PLAY	4.48	−0.34	5.06	5.21	0	5.18	0	5.13	0	0	4.88	0.01	0	4.87	—	5.21	5.21	4.52
REC	3.96	−0.31	5.05	5.21	0	5.18	0	5.13	0	0	4.87	0.02	0	4.89	—	5.21	5.21	4.52
F.F	3.95	−0.02	5.05	5.21	0	5.18	0	5.12	0	0	4.76	0.01	0	4.77	—	5.21	5.20	4.52
REW	3.95	−0.19	5.06	5.22	0	5.19	0	5.13	0	0	4.82	0.02	0	4.80	—	5.22	5.21	4.53

REF. NO.	Q6014			Q6015			Q6016			Q6017			Q6018			Q6019		
MODE	E	C	B	E	C	B	E	C	B	E	C	B	E	C	B	E	C	B
STOP	5.21	0	5.21	0	5.22	0.03	0	0.27	0	0	0	0.26	0	13.9	0	0	13.9	0
PLAY	5.20	0	5.20	0	5.21	0.03	0	0.26	0	0.29	0	0.26	0	13.8	0	0	13.8	0
REC	5.21	0	5.21	0	5.21	0.03	0	0.26	0	0.29	0	0.26	0	13.8	0	0	13.8	0
F.F	5.20	−0.01	5.19	−0.01	5.21	0.03	0	0.26	0	0.28	−0.01	0.26	0	13.8	0	0	13.8	0
REW	5.21	0	5.21	−0.01	5.21	0.03	0	0.26	0	0.28	−0.01	0.26	−0.01	13.8	−0.01	0	13.8	0

REF. NO.	Q6020			Q6021			Q6022			Q6023			Q6024			Q6025		
MODE	E	C	B	E	C	B	E	C	B	E	C	B	E	C	B	E	C	B
STOP	0	0.03	0.59	0	5.20	0	0.05	13.9	0.29	13.9	13.6	13.9	13.9	13.9	13.6	0	5.15	0
PLAY	0	0.02	0.59	0	5.20	0	0.05	13.8	0.29	13.8	13.5	13.8	13.8	13.8	13.5	0	5.15	0.01
REC	0	0.02	0.58	0	5.20	0	0.04	13.8	0.29	13.8	13.6	13.8	13.8	13.8	13.6	0	5.16	0.01
F.F	0	0.03	0.60	0	5.21	0	0.05	13.8	0.30	13.8	13.5	13.8	13.8	13.8	13.5	0	5.14	0
REW	0	0.02	0.58	0	5.19	0	0.03	13.8	0.28	13.8	13.5	13.8	13.8	13.8	13.5	0	5.15	0.01

REF. NO.	Q6026			Q6027			Q6028			Q6029			Q6030			Q6031		
MODE	E	C	B	E	C	B	E	C	B	E	C	B	E	C	B	E	C	B
STOP	0	8.69	0.02	9.11	0.28	9.05	0	9.07	0	9.11	0.01	9.08	0.02	13.9	0	5.09	0	5.08
PLAY	0	8.68	0.02	9.10	—	9.04	0	9.06	0	9.10	—	9.07	—	13.8	—	5.08	0	5.06
REC	0	8.69	0.02	9.10	—	9.04	0	9.06	0	9.11	—	9.07	—	13.8	—	5.06	0	5.05
F.F	0	0.03	0.59	9.09	9.03	8.36	0	7.53	0.08	9.11	7.61	8.54	7.03	13.8	7.61	5.07	0	5.06
REW	0	0.03	0.60	9.09	9.03	8.36	0	7.52	0.07	9.10	7.61	8.53	7.02	13.8	7.61	5.06	0	5.05

REF. NO.	Q6032			Q6033			Q6034			Q6035			Q6036			Q6037		
MODE	E	C	B	E	C	B	E	C	B	E	C	B	E	C	B	E	C	B
STOP	5.08	0	5.07	5.09	0.49	5.08	5.08	2.07	4.97	5.09	1.61	4.99	0	0.63	0	0	0.73	0.01
PLAY	5.08	0	5.06	5.08	0.50	5.07	5.08	2.13	4.96	5.07	1.73	4.98	0	0	0.58	0	0	0.01
REC	5.06	0	5.05	5.06	0.47	5.05	5.06	—	4.95	5.06	—	4.96	0	0	0.01	0	0	0.57
F.F	5.07	0	5.06	5.07	—	5.06	5.07	—	4.96	5.07	—	4.96	0	0.40	0	0	0.46	0.01
REW	5.06	0	5.05	5.06	—	5.05	5.08	—	4.97	5.08	—	4.97	0	0.75	0.01	—	—	—

REF. NO.	Q6039			Q6040			Q6041		
MODE	E	C	B	E	C	B	E	C	B
STOP	0	0.01	0.59	0	0	0.29	0	3.09	0
PLAY	0	4.36	0	0	0	0.29	0	3.07	0
REC	0	4.35	0.01	0	0	0.29	0	3.08	0
F.F	0	0.01	0.59	0	0	0.29	0	3.07	0
REW	—	—	—	—	—	—	—	—	—

SYSTEM

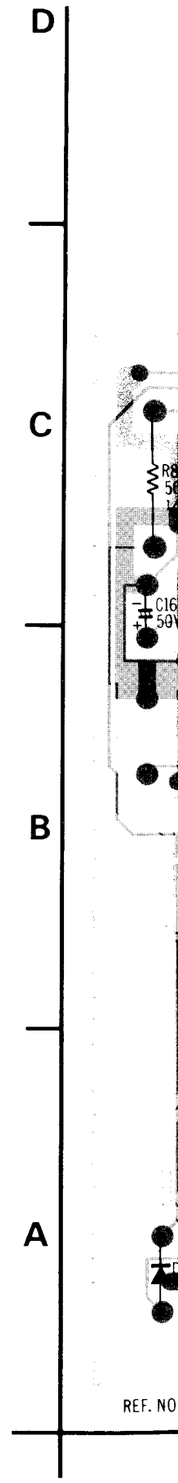

SYSTEM & COUNTER CONTROL P.C.B. UNIT [VEP06164A]

P21

1	5V BACK UP
2	DEW SENSOR
3	TAKEUP PH. TR
4	TAPE SNS. LED

1	SERIAL CODE
2	SERIAL CLK(2)
3	SLOW TRACKING
4	GND
5	+5V
6	SLOW TR. VCC

P20

1	SUPPLY PH. TR
2	CASSETTE DOWN Ⓛ
3	CASSETTE UP Ⓛ

P22

1	INDEX SIGNAL
2	GND
3	STOP POSITION
4	T2
5	GND
6	T1
7	EJECT POSITION
8	GND
9	REEL SENS. LED
10	S1

JD

1	CYL. LOCK Ⓗ
2	CAP REVERSE Ⓗ
3	FWD 5V
4	SLOW TRACING
5	SLOW .F. ADV Ⓗ
6	STOP Ⓗ
7	LOADING Ⓗ
8	UNLOADING Ⓗ

JC

1	A– DUB Ⓛ
2	SLOW TR. VCC
3	CAP C/R 2^3H
4	PAUSE RESET Ⓛ
5	CAP 2^2 Ⓗ
6	CAP ON 2^0 Ⓗ
7	——
8	SPEED FIX Ⓛ

JB

1	DELAYED REC Ⓗ
2	AUDIO REC Ⓗ
3	REC Ⓛ
4	FULL ERASE Ⓗ
5	V-V VIDEO Ⓗ
6	SAFETY TAB ON Ⓛ
7	REF 177 KHz
8	REF 886 KHz

P27

GND	1
GND	2

JE

SAFETY TAB SW	1
GND	2

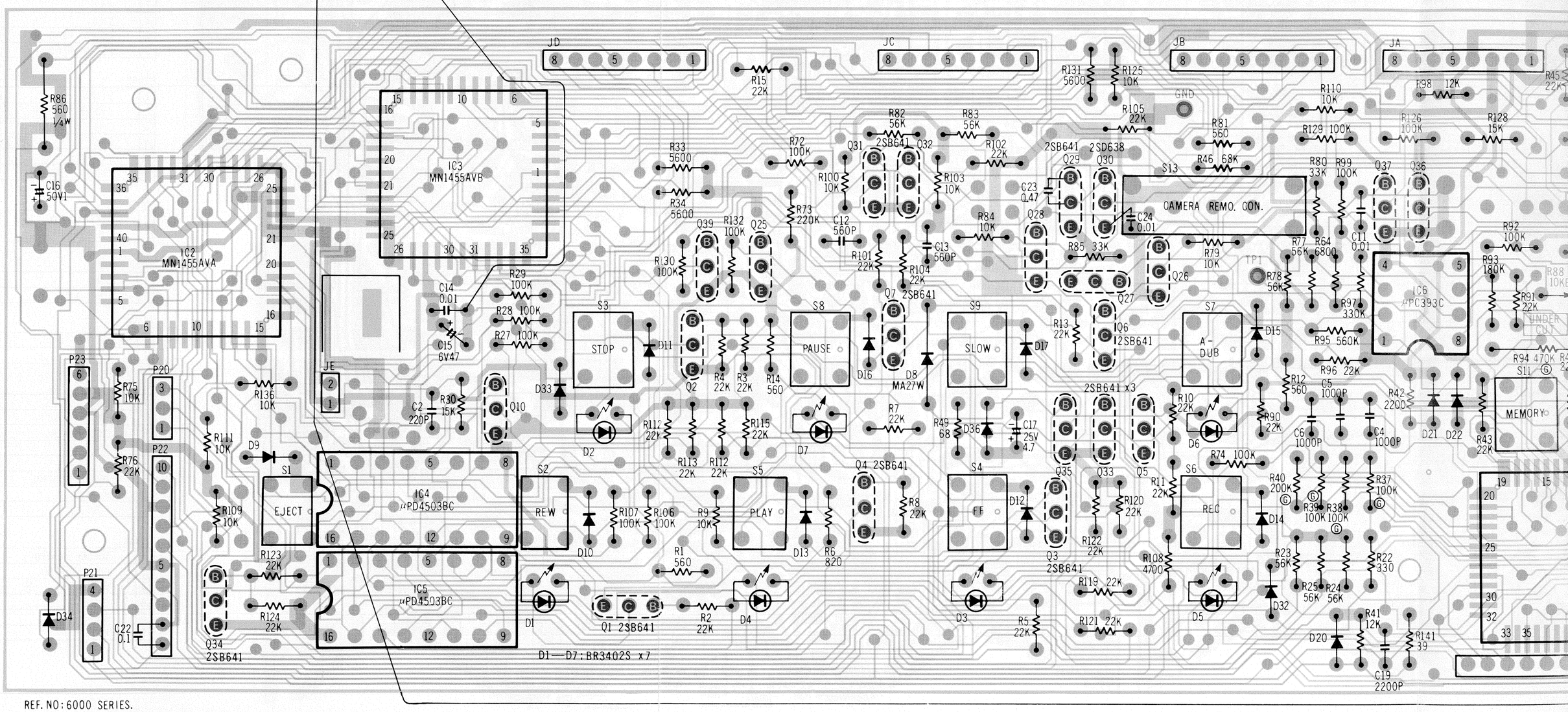

	DELAYED REC Ⓗ
	AUDIO REC Ⓗ
	REC Ⓛ
	FULL ERASE Ⓗ
	V-V VIDEO Ⓗ
	SAFETY TAB ON Ⓛ
	REF 177 KHz
	REF 886 KHz

JA

1	GND
2	12V OUT
3	+9V
4	+5V
5	9V OFF Ⓗ
6	CURR. EMPHA Ⓛ
7	AUDIO MUTE Ⓗ
8	AUDIO EE Ⓗ

P24

1	12V OUT
2	BATT. CHARGE
3	12V IN
4	12V IN
5	EXT 12V
6	GND

P25

1	——
2	ANT SW. CH LOCK
3	CAMERA IN Ⓛ
4	SAFETY TAB
5	SERIAL CLK (2)
6	SERIAL CODE
7	TC Ⓛ & SERIAL
8	TALLY & CLK (1)
9	CAMERA PAUSE Ⓛ
10	STAND-BY Ⓗ

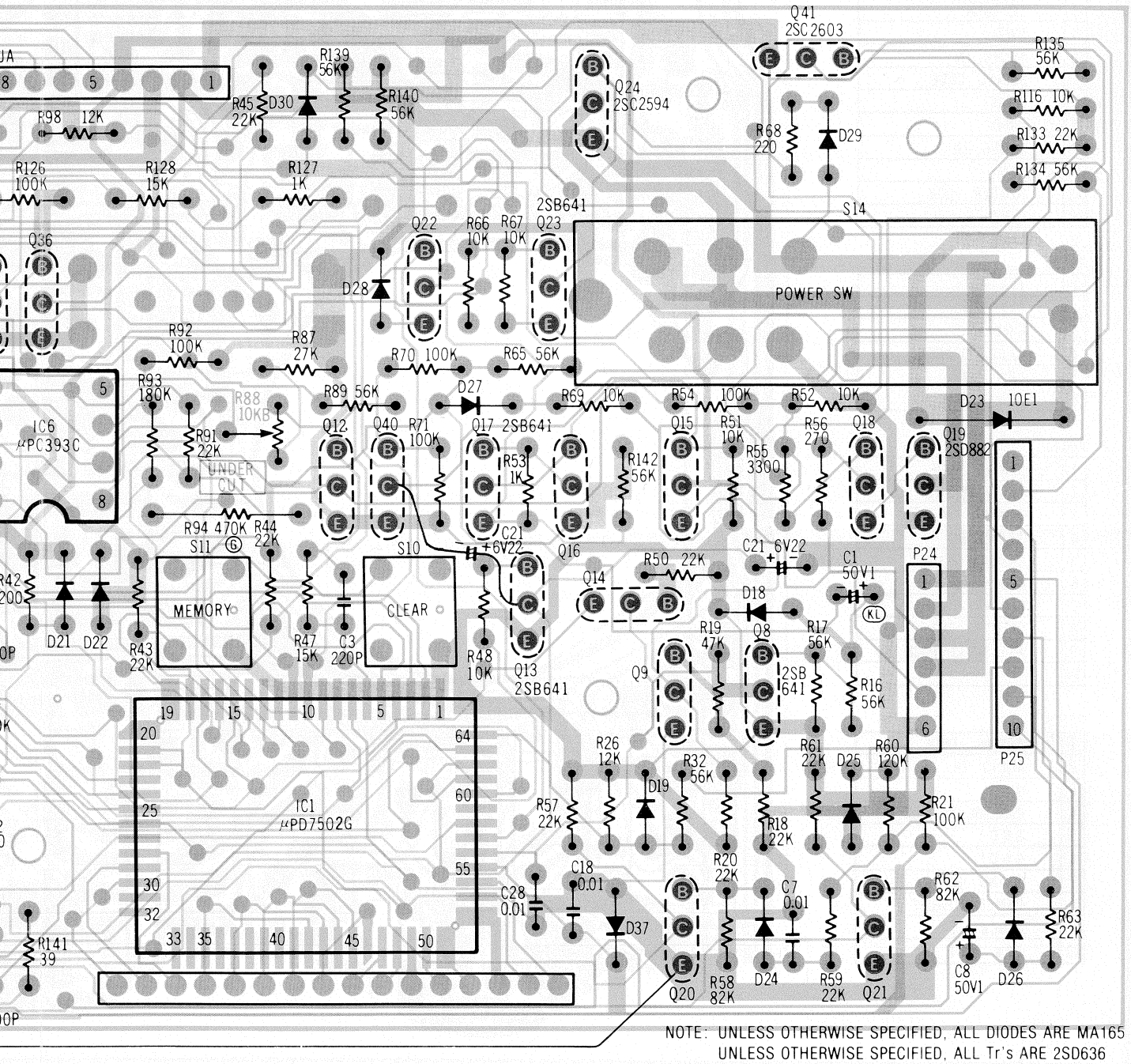

NOTE: UNLESS OTHERWISE SPECIFIED, ALL DIODES ARE MA165
UNLESS OTHERWISE SPECIFIED, ALL Tr's ARE 2SD636

SYSTEM & COUNTER CONTROL SCHEMATIC DIAGRAM

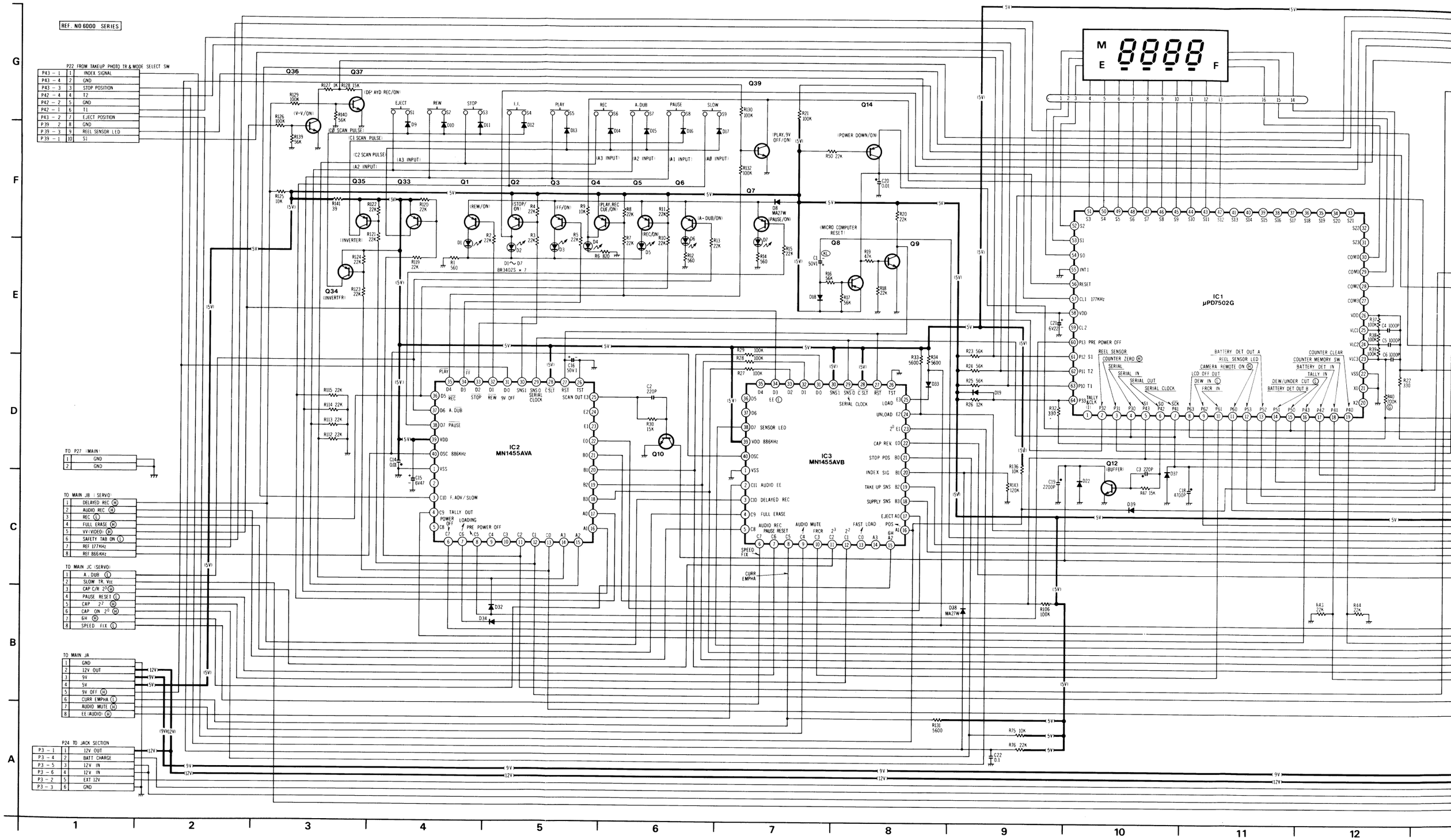

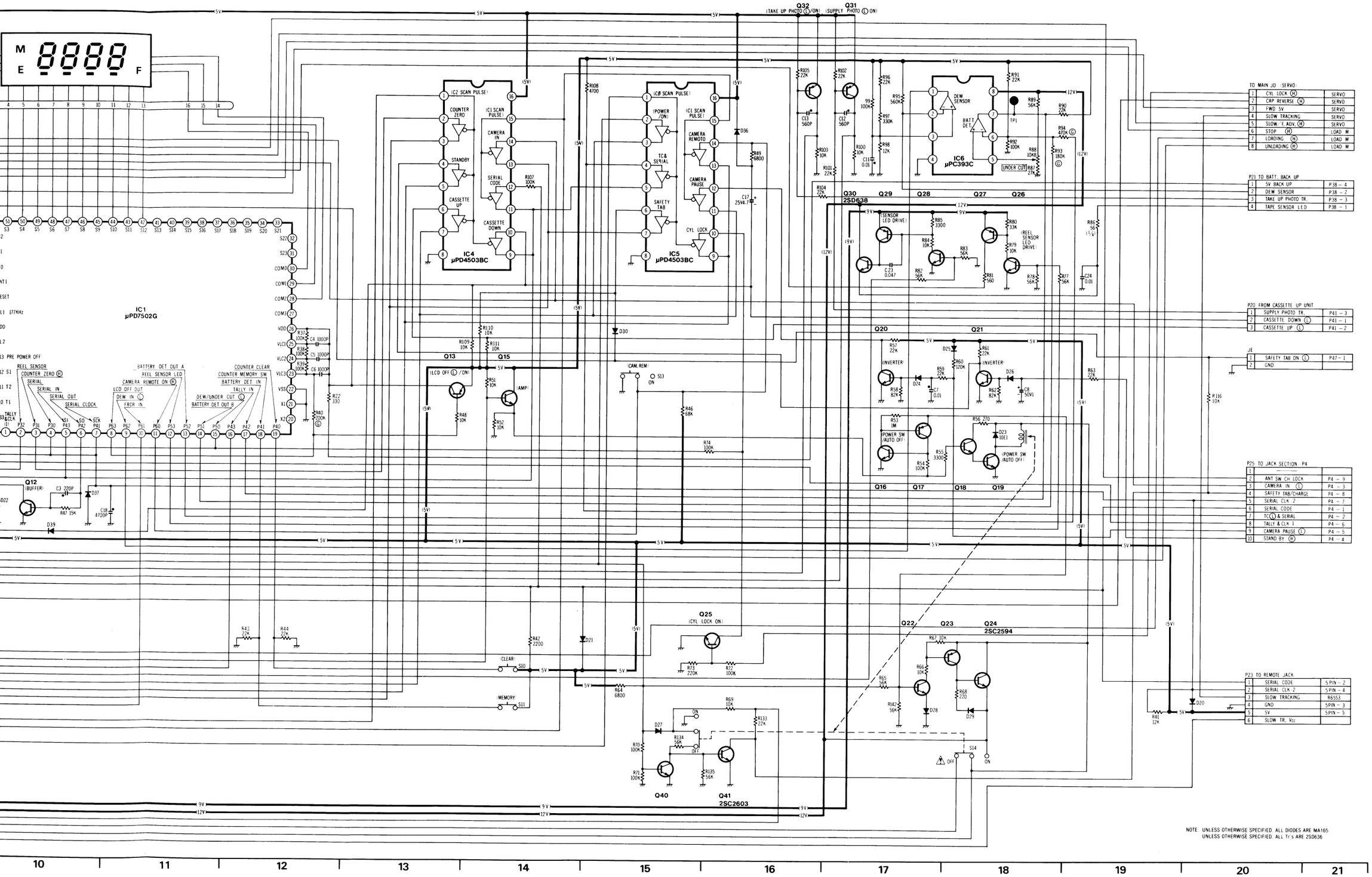

System Control Schematic	
Q6001	F-4
Q6002	F-5
Q6003	F-5
Q6004	F-5
Q6005	F-6
Q6006	F-6
Q6007	F-7
Q6008	E-8
Q6009	E-8
Q6010	D-6
Q6012	C-10
Q6013	D-13
Q6014	F-8
Q6015	D-14
Q6016	D-17
Q6017	D-17
Q6018	D-18
Q6019	D-18
Q6020	E-17
Q6021	E-18
Q6022	B-17
Q6023	C-18
Q6024	C-18
Q6025	B-15
Q6026	E-18
Q6027	E-18
Q6028	E-17
Q6029	E-17
Q6030	E-17
Q6031	G-17
Q6032	G-16
Q6033	E-4
Q6034	E-3
Q6035	E-4
Q6036	F-3
Q6037	F-4
Q6039	F-7
Q6040	A-15
Q6041	A-16
IC6001	E-11
IC6002	C-5
IC6003	C-7
IC6004	F-13
IC6005	F-15
IC6006	F-18

RF CONVERTER SCHEMATIC DIAGRAM (ENC17553)

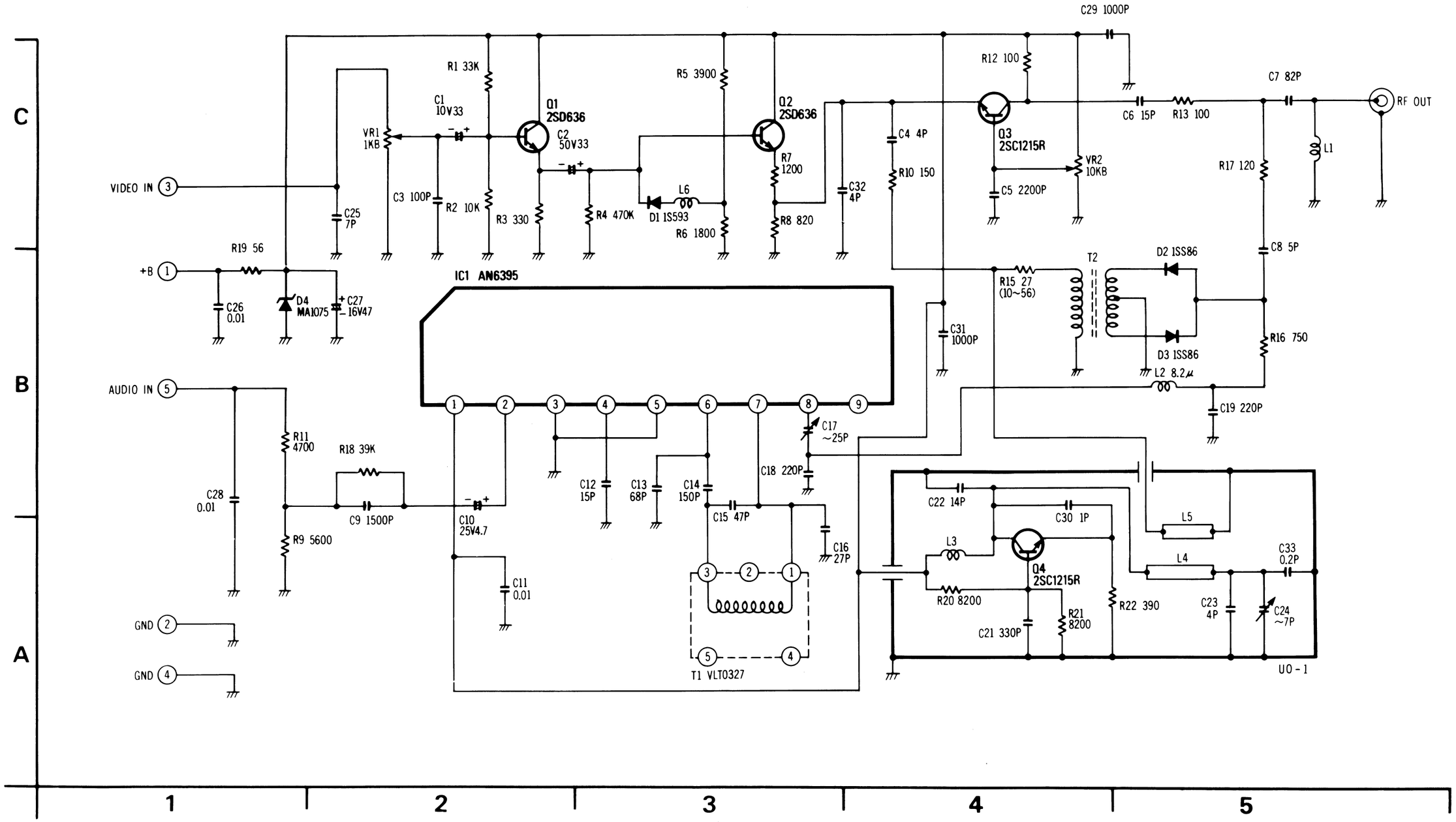

RF CONV

RF CONVERTER UNIT [ENC17553; NV-100E/EG]

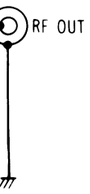

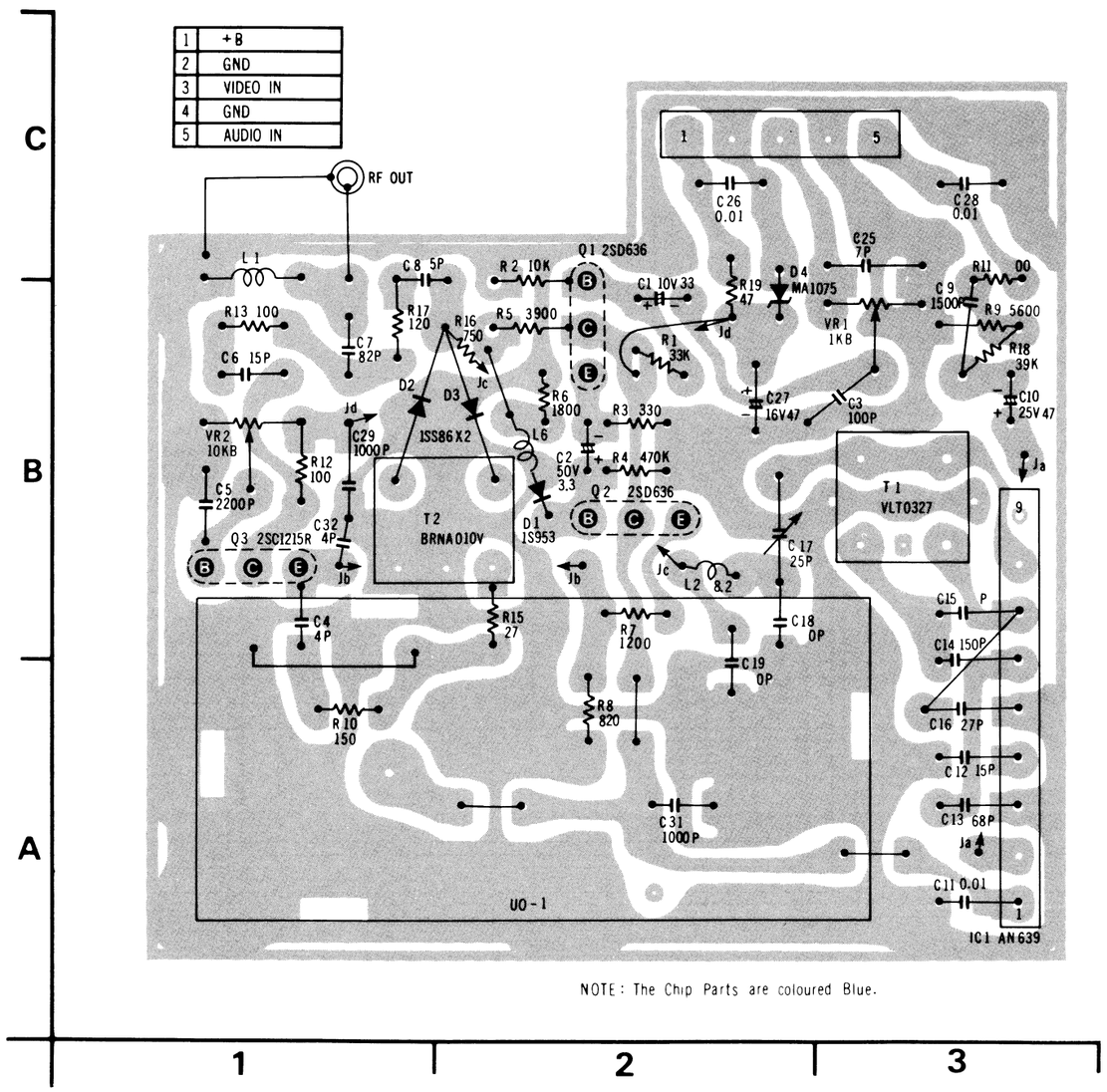

NOTE: The Chip Parts are coloured Blue.

RF CONVERTER UNIT [ENC17554; NV-100B]

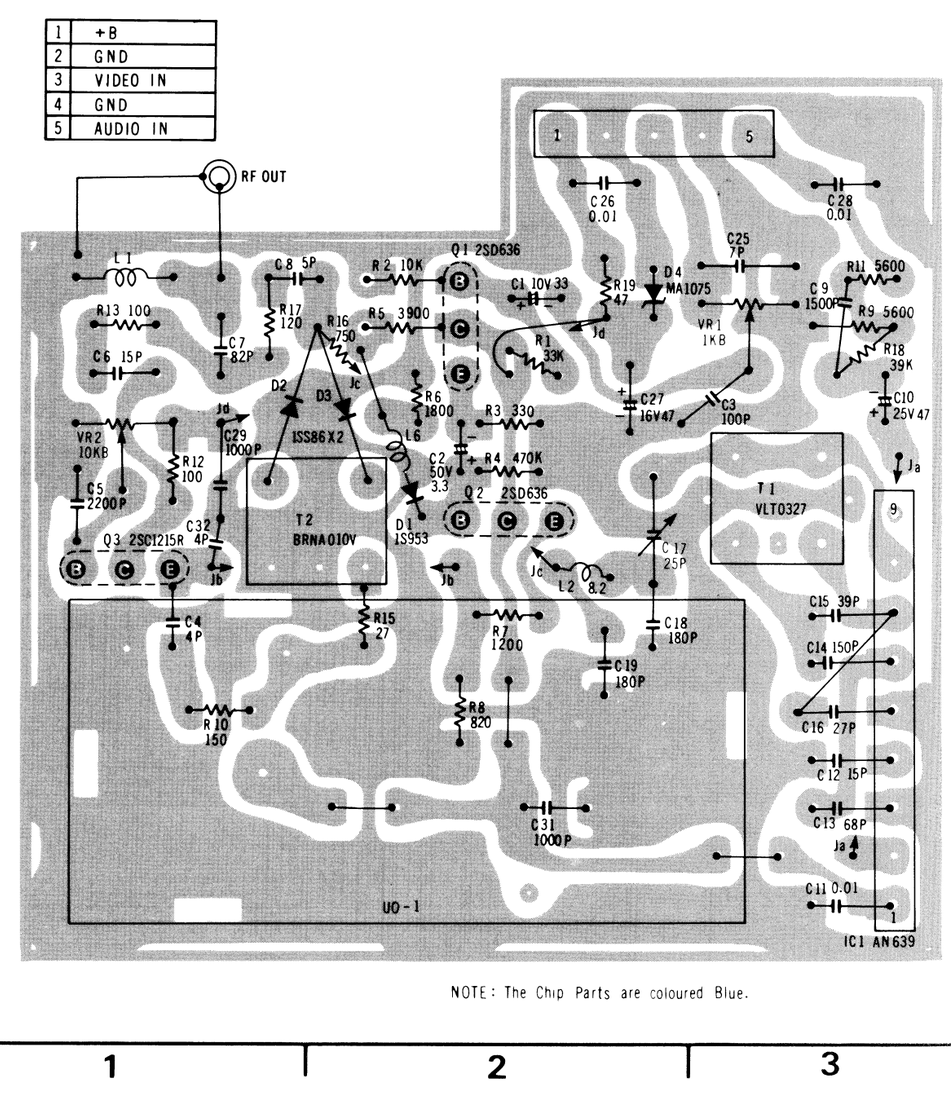

NOTE: The Chip Parts are coloured Blue.

RF CONVERTER SCHEMATIC DIAGRAM (ENC17554)

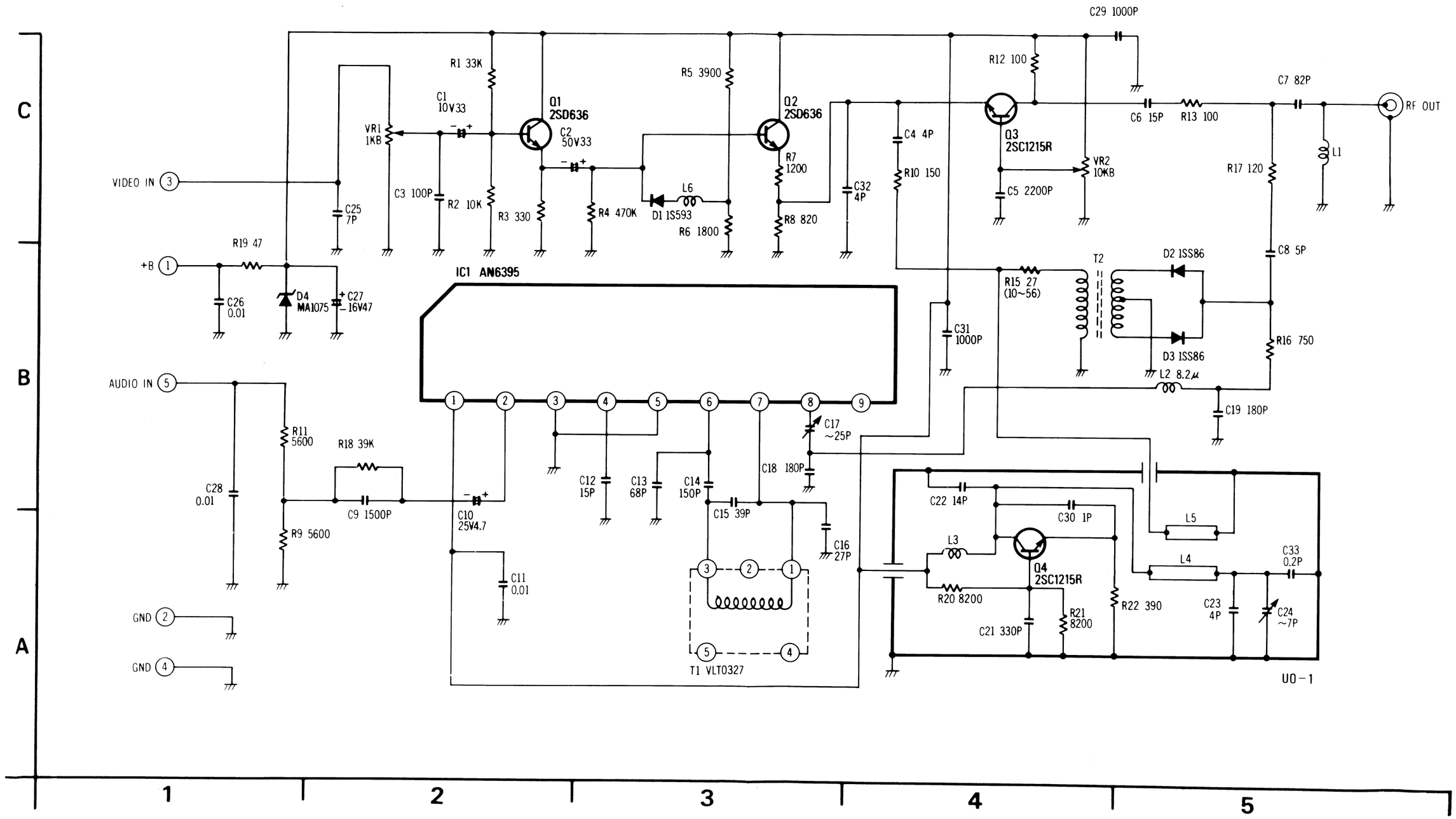

BATTERY BACK UP C.B.A. (VEP06165A)

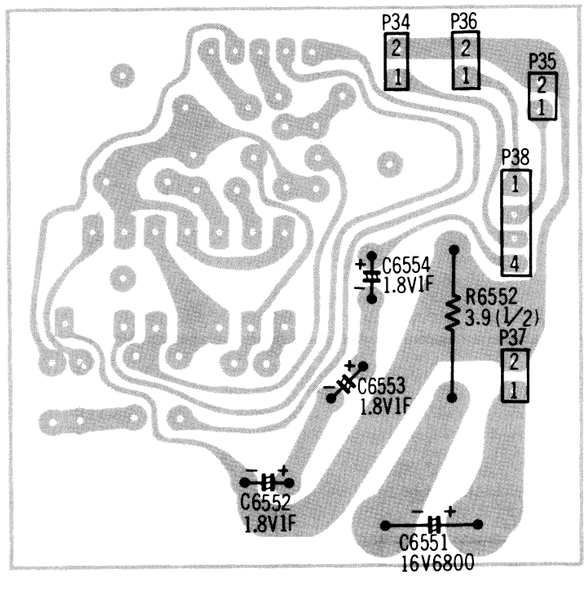

P34 TO DEW SENSOR

1	DEW SENSOR
2	GND

P36 TO TAKE UP SENSOR P40

1	TAKE UP SNS
2	GND

P35 TO TAPE SNS.LED

1	TAPE SNS LED
2	GND

P38 TO P21 SYSTEM CONTROL

1	TAKE UP SNS
2	TAPE SNS.LED
3	DEW SNS
4	MEMORY COUNTER

P37 TO LOAD MOTOR DRIVE P16

1	LOAD BACK UP
2	GND

TAKEUP REEL SENSOR C.B. (VJB00801)

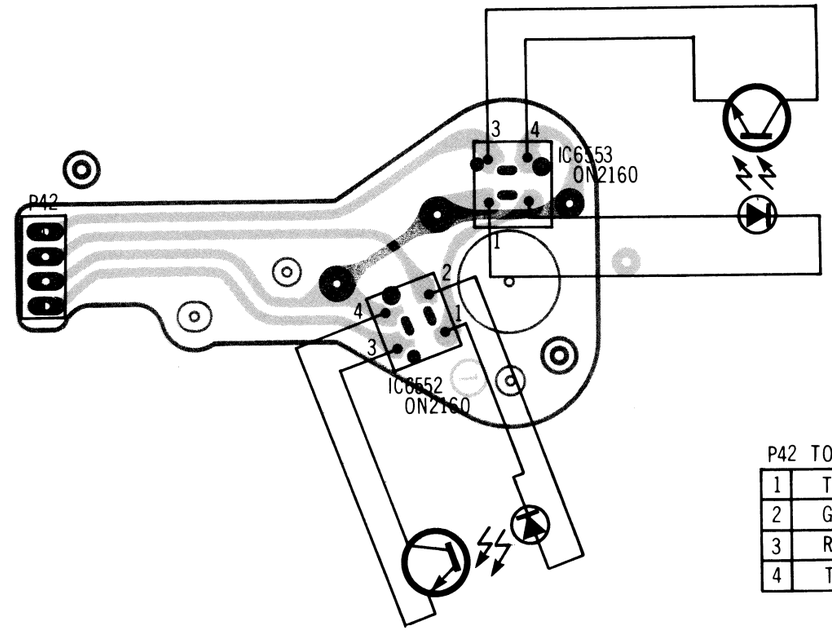

P42 TO P22 SYSTEM CONTROL

1	T1
2	GND
3	REEL SENSER LED
4	T2

FULL ERASE HEAD C.B.A. (VEP00799A)

P28 TO P7 POWER SUPPLY

1	GND
2	FULL ERASE 9V

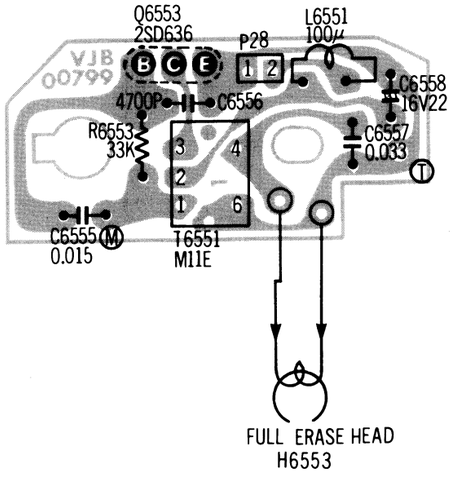

TAKEUP PHOTO TR C.B. (VJB00796)

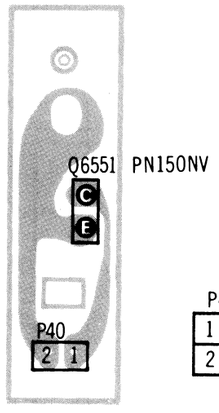

P40 (TO P36)

1	TAKE UP PHOTO TR
2	GND

A/C, AE HEAD C.B. (VJB00798)

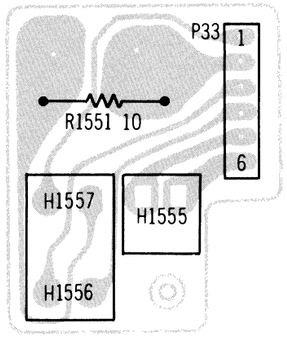

P33 TO P10 SERVO & AUDIO

1	AUDIO HEAD(R)
2	AUDIO HEAD(W)
3	GND
4	CTL HEAD
5	GND
6	A.E. HEAD

SENSOR LED C.B. (VJB00800)

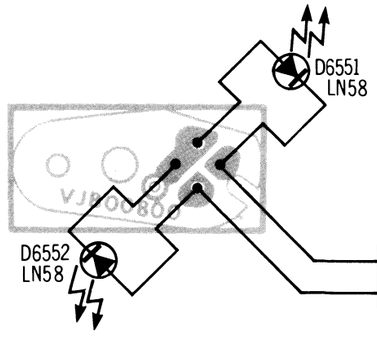

P35 (BATTERY BACK UP)

2	GND
1	TAPE SONSOR

FG HEAD C.B. (VJB00803)

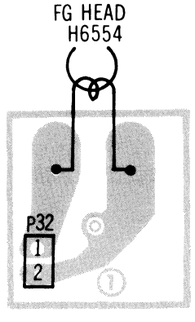

P32 TO P12 SERVO

GND	1
FG	2

SUPPLY REEL SENSOR C.B. (VJB00802)

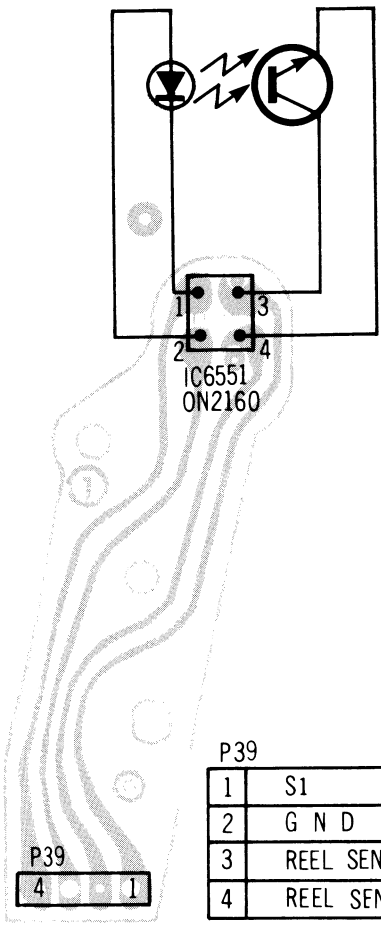

P39

1	S1
2	G N D
3	REEL SENSOR LED
4	REEL SENSOR LED

→ TO P22 SYSTEM CONTROL (1, 2, 3)
→ TO TAKE UP REEL SENSOR (4)

SAFETY TAB SW C.B. (VJB00896)

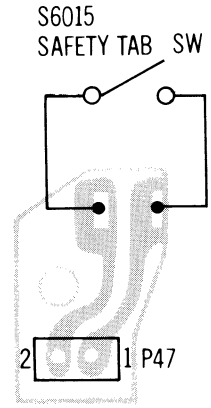

P47

1	SAFETY TAB ON (L)
2	G N D

→ TO SYSTEM CONTROL

SUPPLY PHOTO TR C.B. (VJB00901)

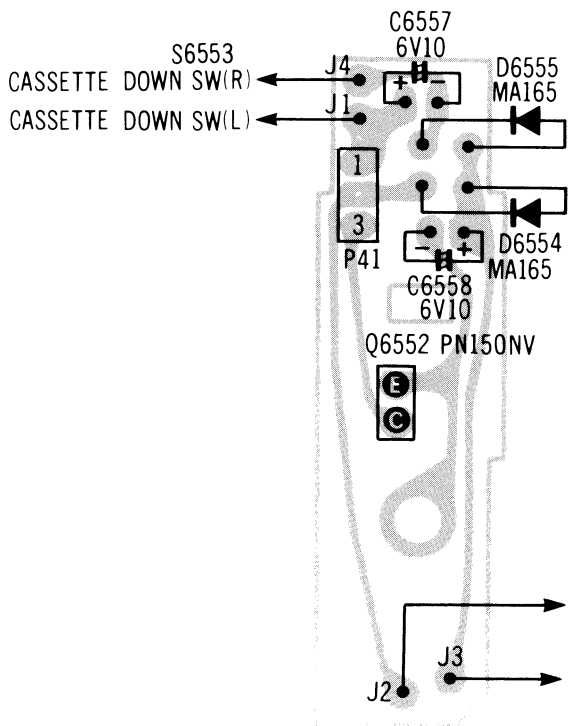

P41 TO P20 SYSTEM CONTROL

1	CASSETTE DOWN SW
2	CASSETTE UP SW
3	SUPPLY PHOTO TR

CIRCUIT BOARD LAYOUT

TOP VIEW

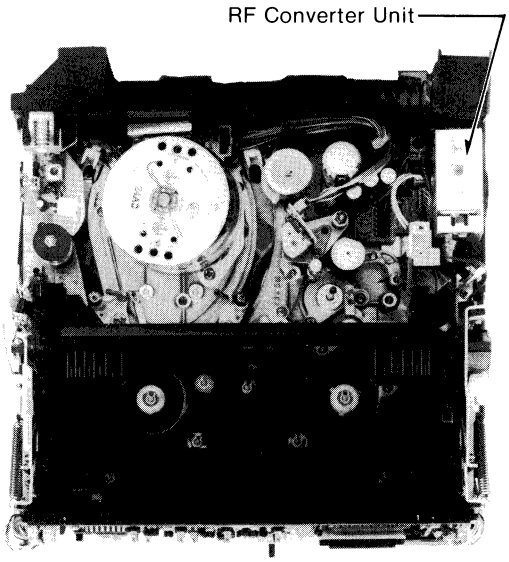

FRONT VIEW

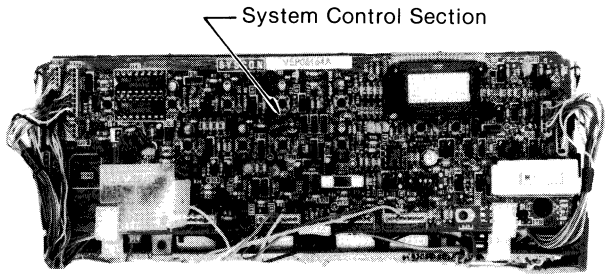

BOTTON VIEW I

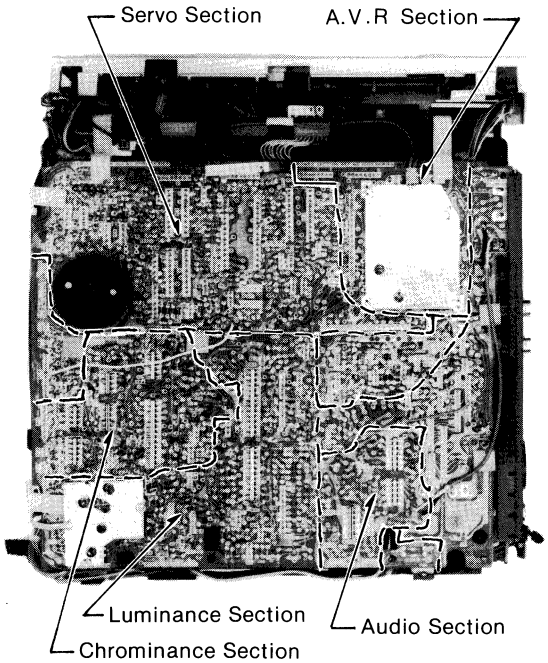

BOTTOM VIEW II

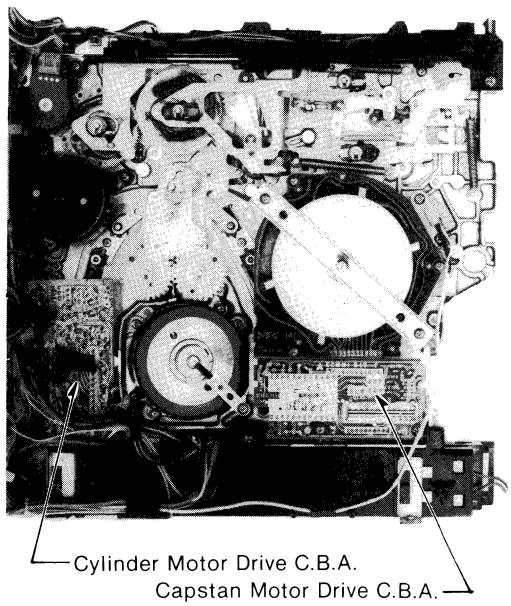

INTERCONNECTION SCHEMATIC DIAGRAM

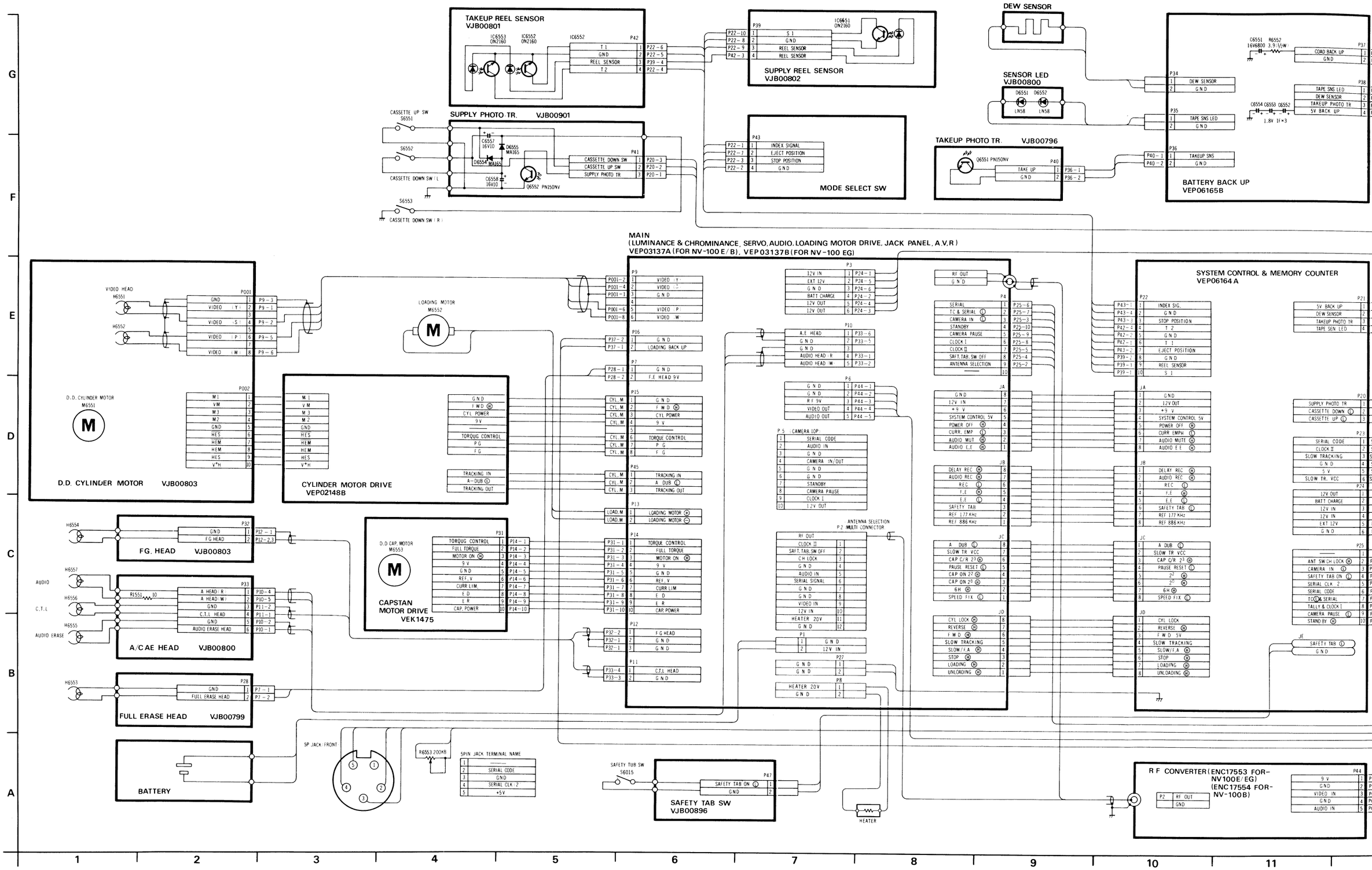

EMATIC DIAGRAM

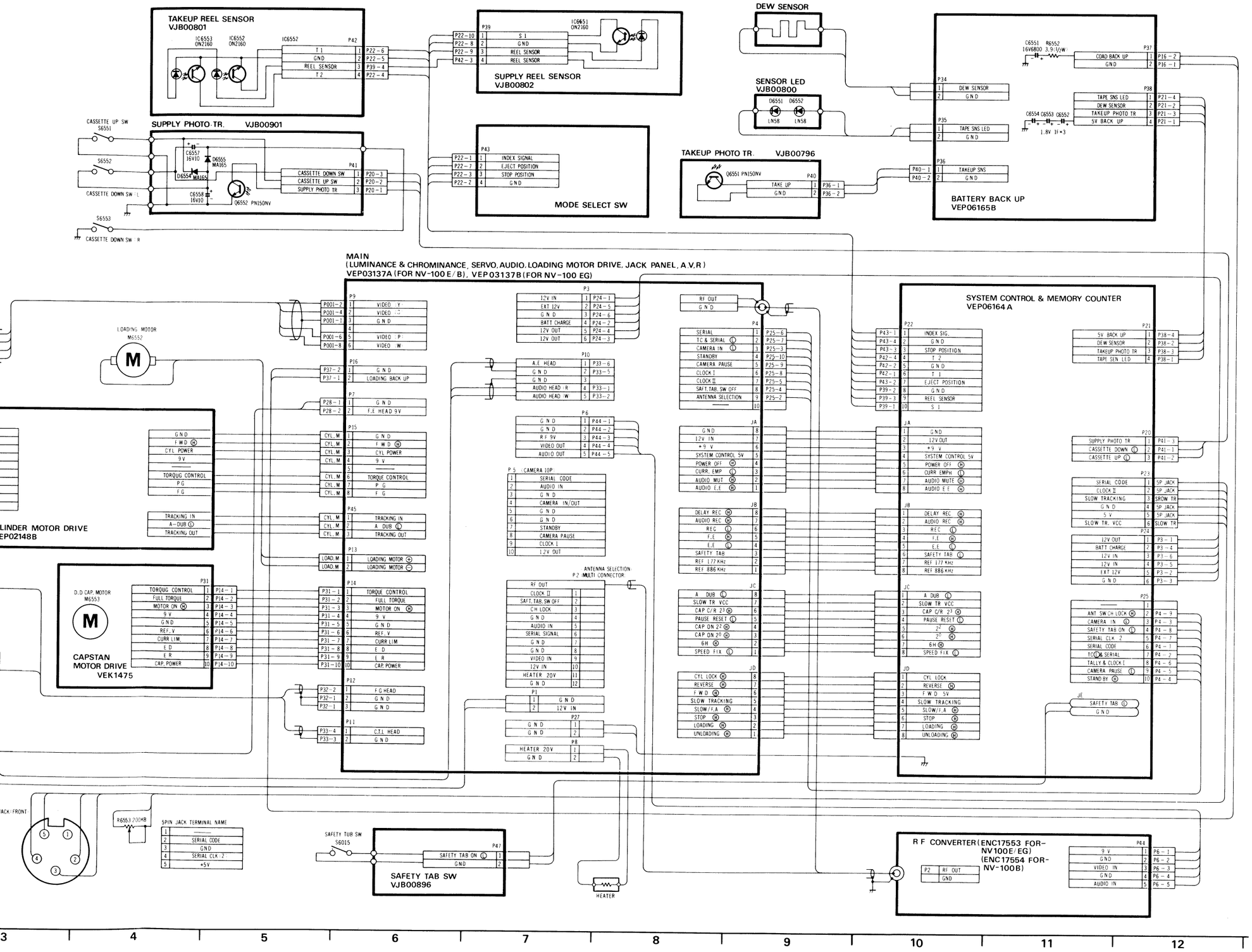

Panasonic

MATSUSHITA ELECTRIC

Printed in Japan

ORDER NO. VRD-8206-099

Service Manual

Portable Video Cassette Recorder

Vol. 4

Panasonic VHS

NV-100 -E -B -EG

Exploded Views
Replacement Parts List

SPECIFICATIONS

Power Source:	DC 12V
Power Consumption:	Approx. 6.7W at Play mode
Video Recording System:	2 rotary heads, helical scanning system
Tape Speed:	23.39mm/s
Tape Format:	Tape width 12.7mm high density tape
Record/Playback Time:	240 min. with NV-E240
FF/REW Time:	Less than 6.5 min. with NV-E180
VIDEO	
Television System:	CCIR: 625 lines, 50 fields PAL colour signal (PAL/D.D.R SECAM colour signal: NV-100EG only)
Modulation System:	Luminance: FM azimuth recording Colour signal: converted subcarrier phase shift recording
Input Level:	VIDEO IN (BNC): 1.0Vp-p, 75Ω unbalanced
Output Level:	VIDEO OUT (BNC): 1.0Vp-p, 75Ω unbalanced RF Modulated: UHF channel 36 (±4), 75Ω unbananced
AUDIO	
Input Level:	MIC IN (M3): −70dB, more than 600Ω unbalanced 10 pin input, Multi input: −20dB, 2.2kΩ unbalanced
Output Level:	LINE OUT (RCA): −6dB, 600Ω unbalanced Earphone: −10dB, 200Ω unbalanced
Audio Track:	1 track
Video Horizontal Resolution:	Colour: more than 240 lines
Signal-to-Noise Ratio:	Video: more than 40dB Audio: more than 43dB
Audio Frequency Response:	80Hz—10kHz
Operating Room Temperature:	0°C—40°C
Operating Humidity:	35%—80%
Weight:	3.8kg (with internal battery pack)
Dimensions:	236(W)×92(H)×242(D)mm
Standard Accessories:	1 pc. Video Cassette Tape 2 pcs. DIN-RF coaxial cable 1 pc. Audio Input Attenuator 1 pc. Earphone 1 pc. Carrying Case
Optional Accessories:	Video cassette tape: NV-E240 Approx. 344m, 240 min. NV-E180 Approx. 258m, 180 min. NV-E120 Approx. 174m, 120 min. NV-E90 Approx. 130m, 90 min. NV-E60 Approx. 88m, 60 min. NV-E30 Approx. 45m, 30 min. Battery Pack, LCS2012E Video Tuner/Timer Adaptor, NV-V10 AC Adaptor, NV-B11 Wireless Remote Controller, NV-A17 Wired Remote Controller, NV-A13 Car Battery Cord, NV-C12 Video Camera Microphone

Weight and dimensions shown are approximate.
Specifications are subject to change without notice.

Panasonic

Matsushita Electric Trading Co., Ltd.
P.O. Box 288, Central Osaka Japan

CONTENTS

SPECIFICATIONS ..... Cover
INNER PARTS LOCATION 4- 1
  TOP VIEW 4- 1
  BOTTOM VIEW 4- 2
EXPLODED VIEWS 4- 3
  1. Transport Section -(1) 4- 3
  2. Moving Mechanism Section -(1) 4- 4
  3. Moving Mechanism Section -(2) 4- 5
  4. Chassis Frame Section -(1) 4- 6
  5. Chassis Frame Section -(2) 4- 7
  6. Casing Parts Section 4- 8
  7. Packing Parts Section 4- 9
MECHANICAL REPLACEMENT PARTS LIST 4-10
ELECTRICAL REPLACEMENT PARTS LIST 4-11

INNER PARTS LOCATION

TOP VIEW

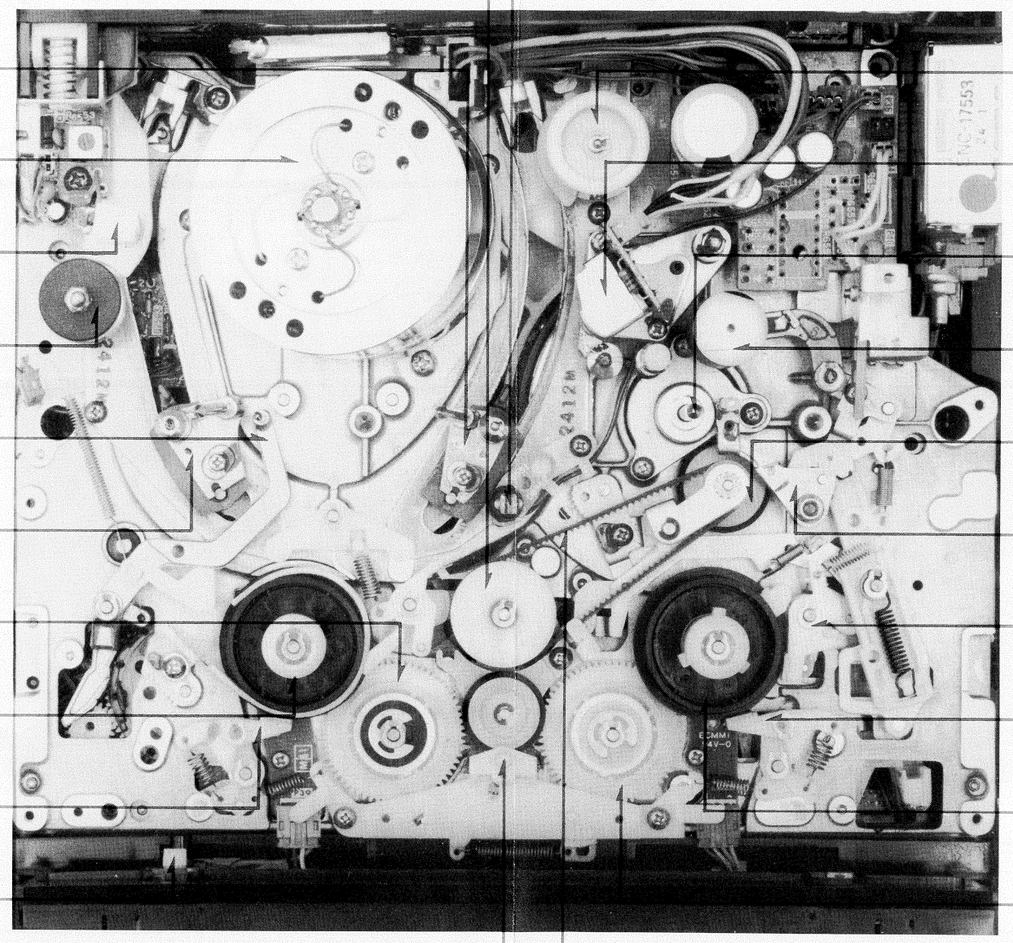

Transmitting Gear Unit (VXP0413)

Inclind Base [R] Unit (VXA1485)

Upper Cylinder Unit (VEH0171)

Full Erase Head (VBS0021)

Supply Roller [K] (VDP0759)

Tension Arm (VXL0933)

Inclind Base [L] Unit (VXA1482)

Supply Reel Idler Gear Unit (VXP0402)

Supply Reel Table Unit (VXR0095)

Brake Arm [L] Unit (VXZ0122)

Safety Lever (VML1379)

F.F. Idler Bracket [1] Unit (VXA1491)

Sensor LED Unit (VEK1461)

Inatia Roller Unit (VXL0939)

A/C Head Unit (VEH0172)

Rotor Unit (VXP0408)

Pressure Roller Arm [1] Unit (VXL0927)

Main Idler [1] Unit (VXP0405)

P5 Arm Unit (VXP0937)

Takeup Soft Arm Unit (VXZ0119)

Brake Arm [R] Unit (VXZ0124)

Takeup Reel Table Unit (VXR0096)

Takeup Reel Idler Gear Unit (VXPO403)

Timing Belt (VDV0141)

BOTTOM VIEW

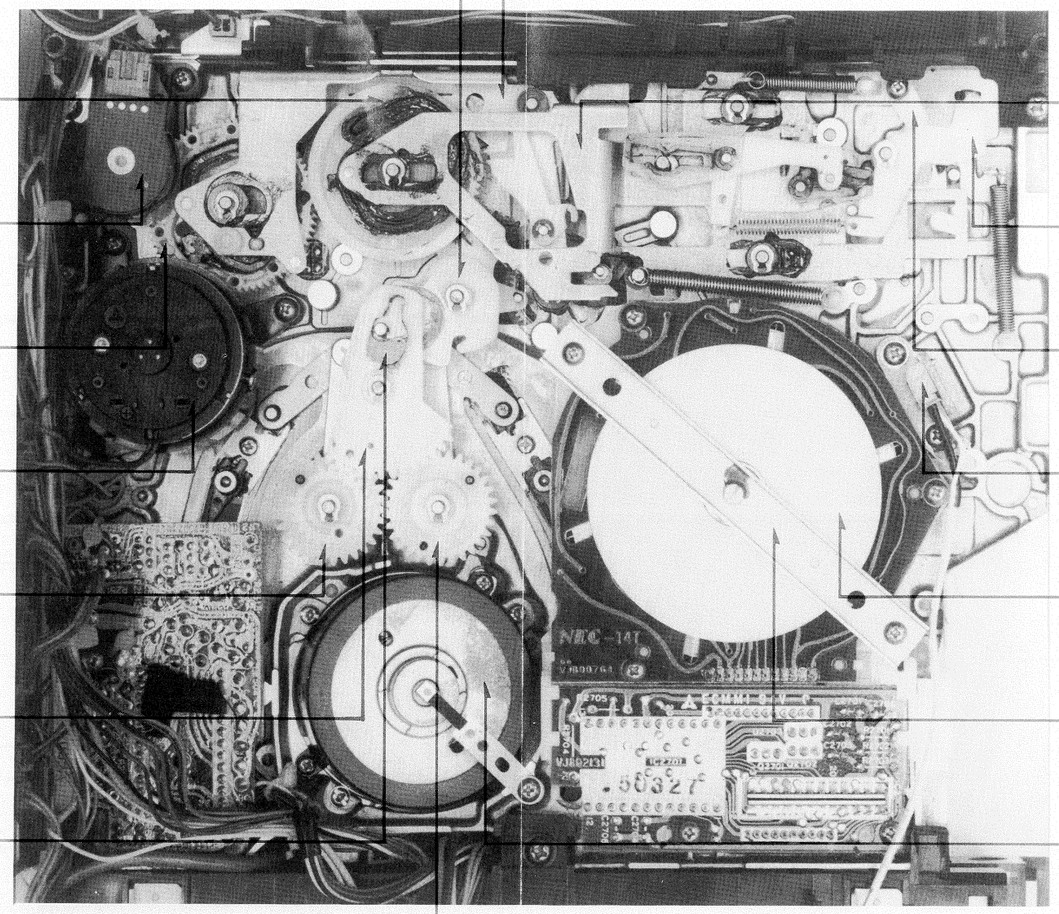

LUBRICATION POINTS

When the marked parts are replaced, apply the recommended lubricants or adhesive for better maintenance of the unit.

Marks	Kind of Lubricant	Availability	Part Number
×××	Morlytone Grease	Available From Factory	MOR265
○○○	Spindle Oil	Purchase From Local Supplier	.....
△△△	Gummed Adhesive	Purchase From Local Supplier	.....

EXPLODED VIEWS ❶ *Transport Section*

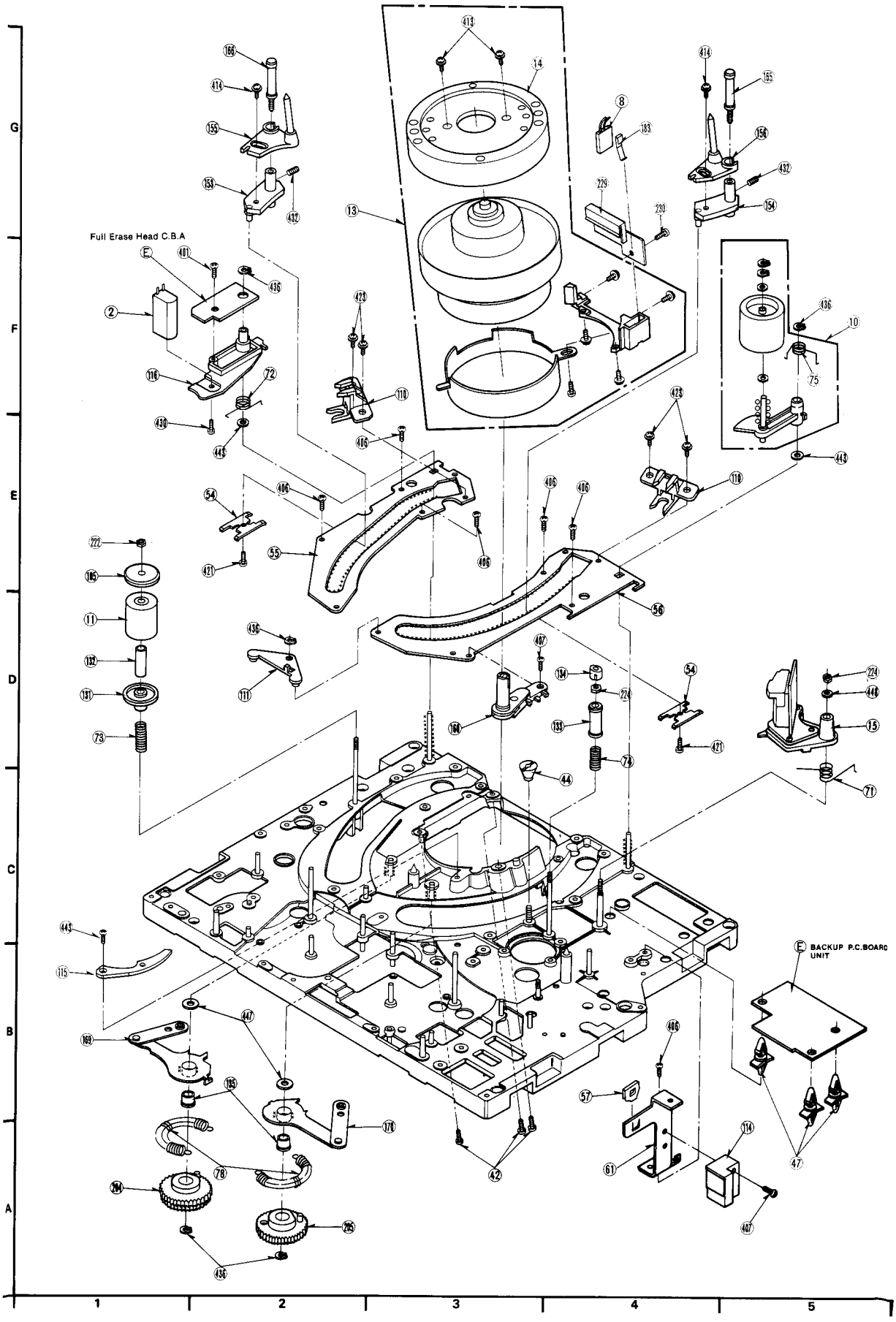

❷ *Moving Mechanism Section-(1)*

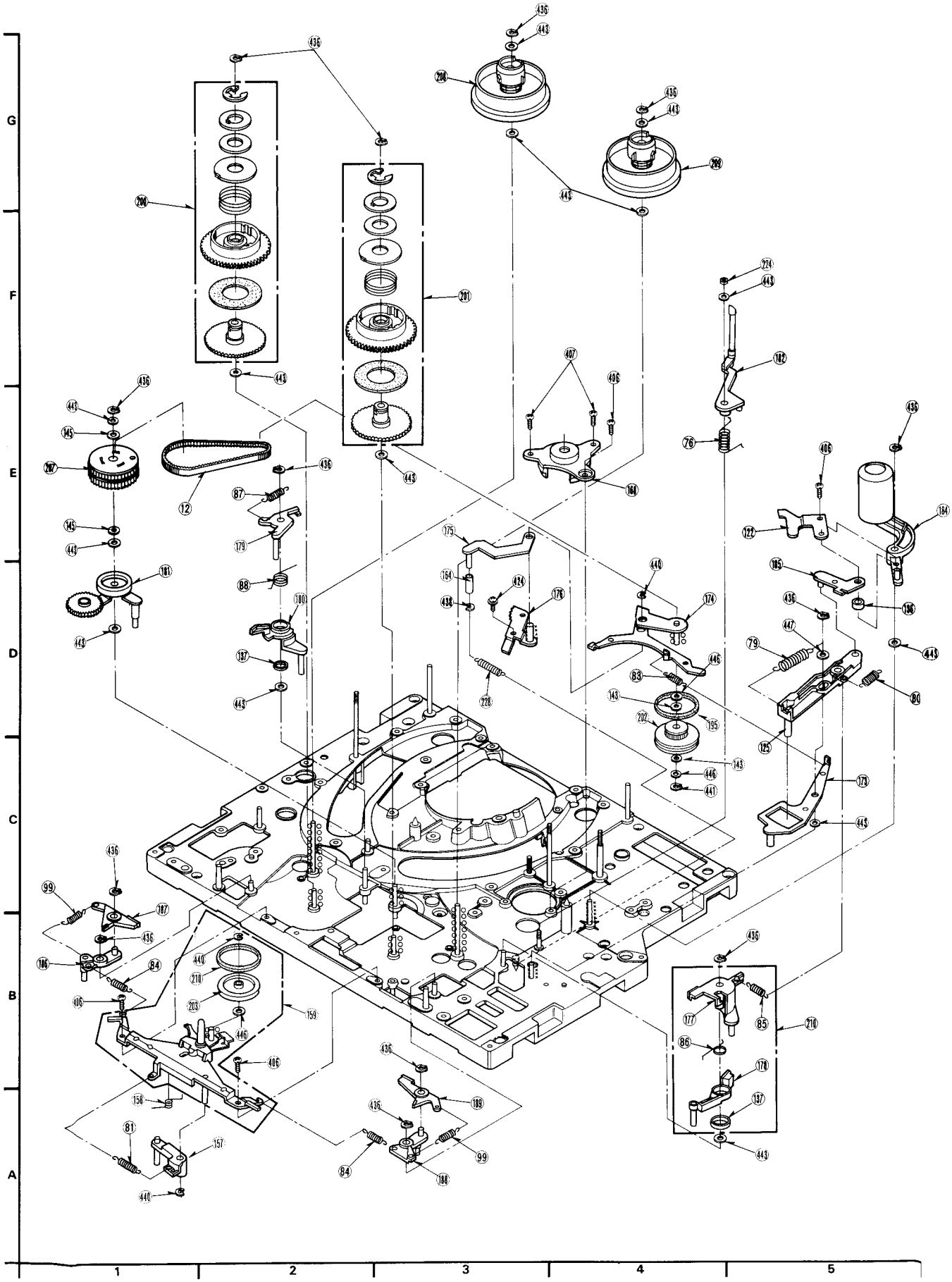

❸ *Moving Mechanism Section-(2)*

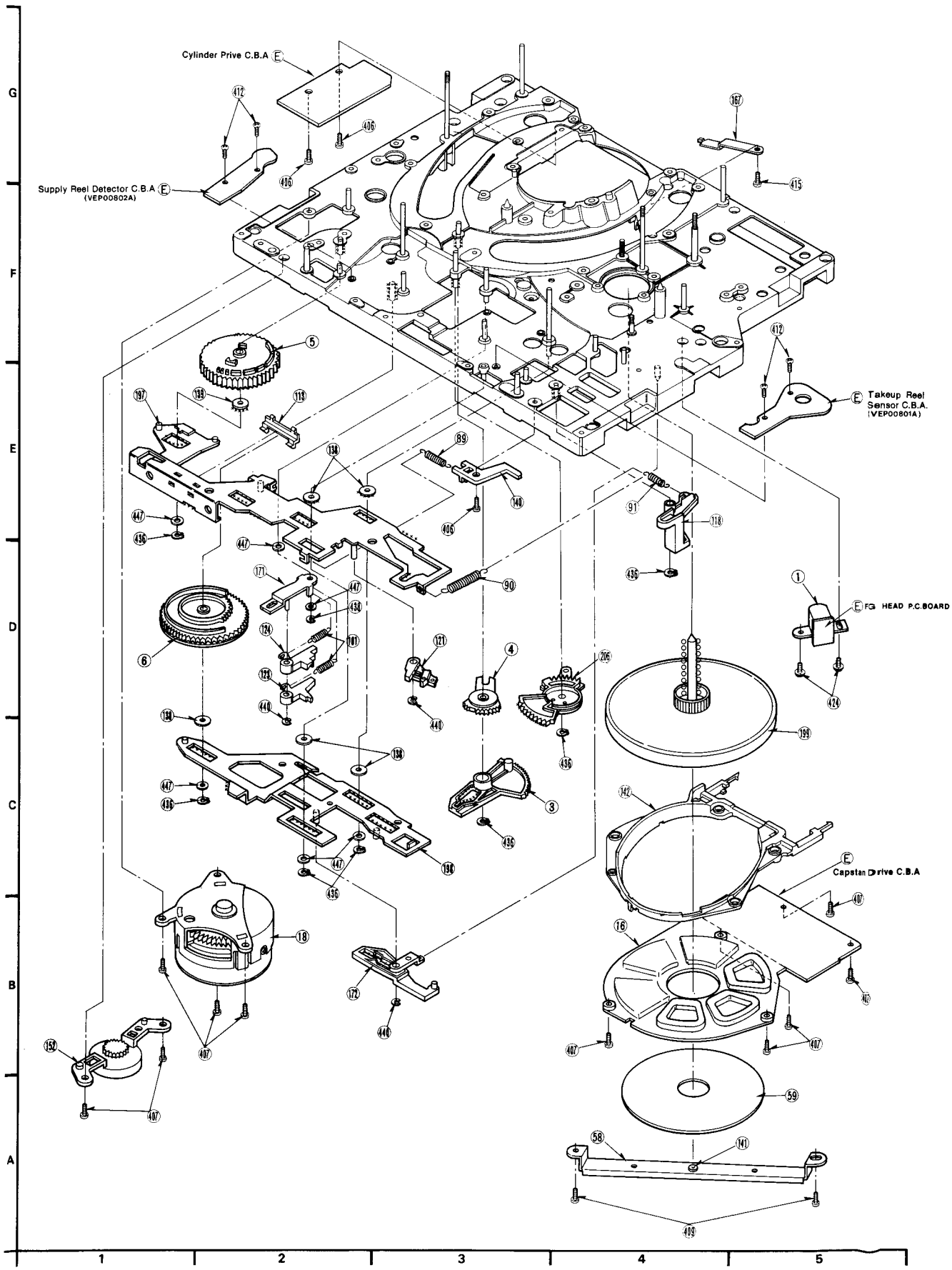

❹ *Chassis Frame Section-(1)*

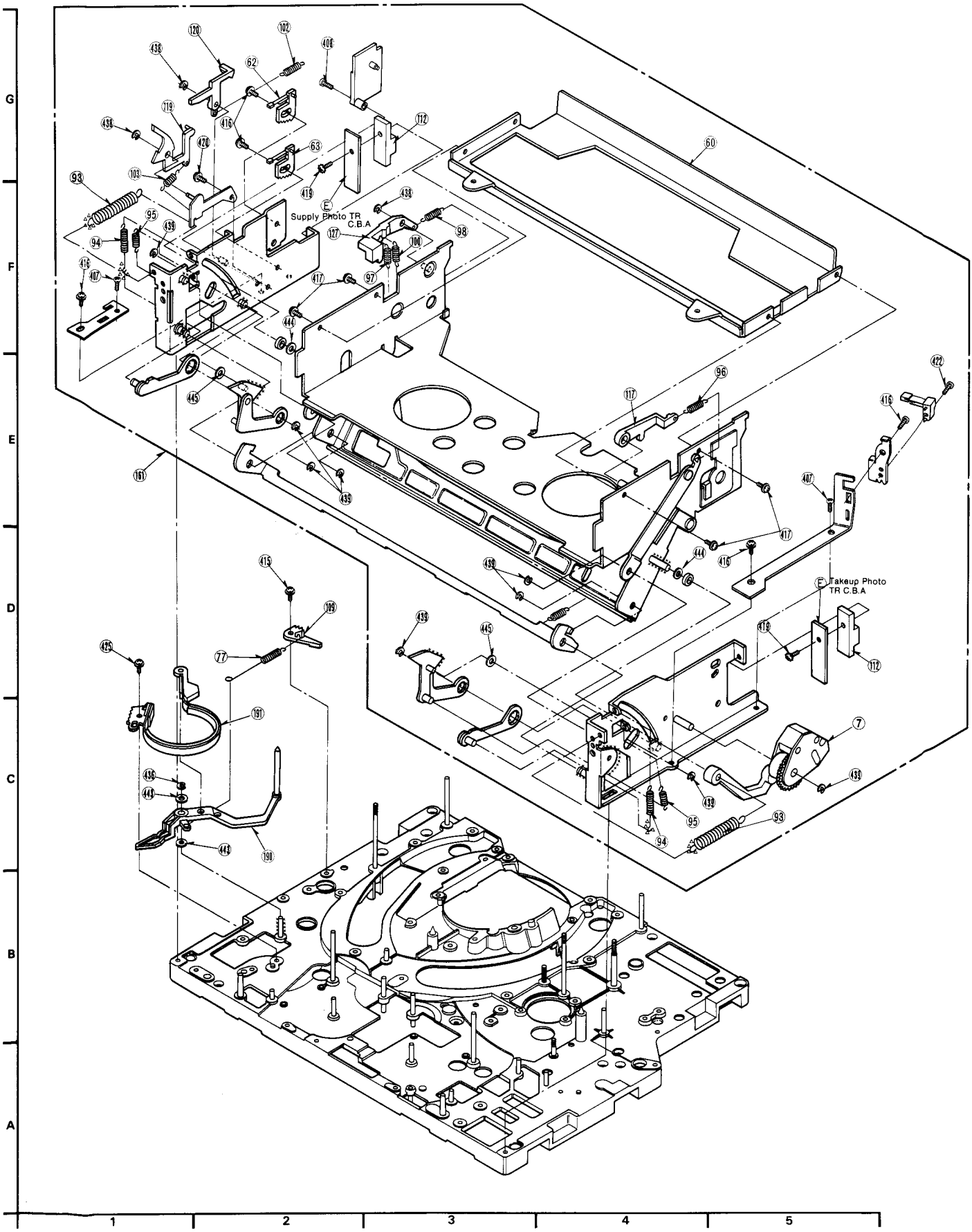

❺ *Chassis Frame Section-(2)*

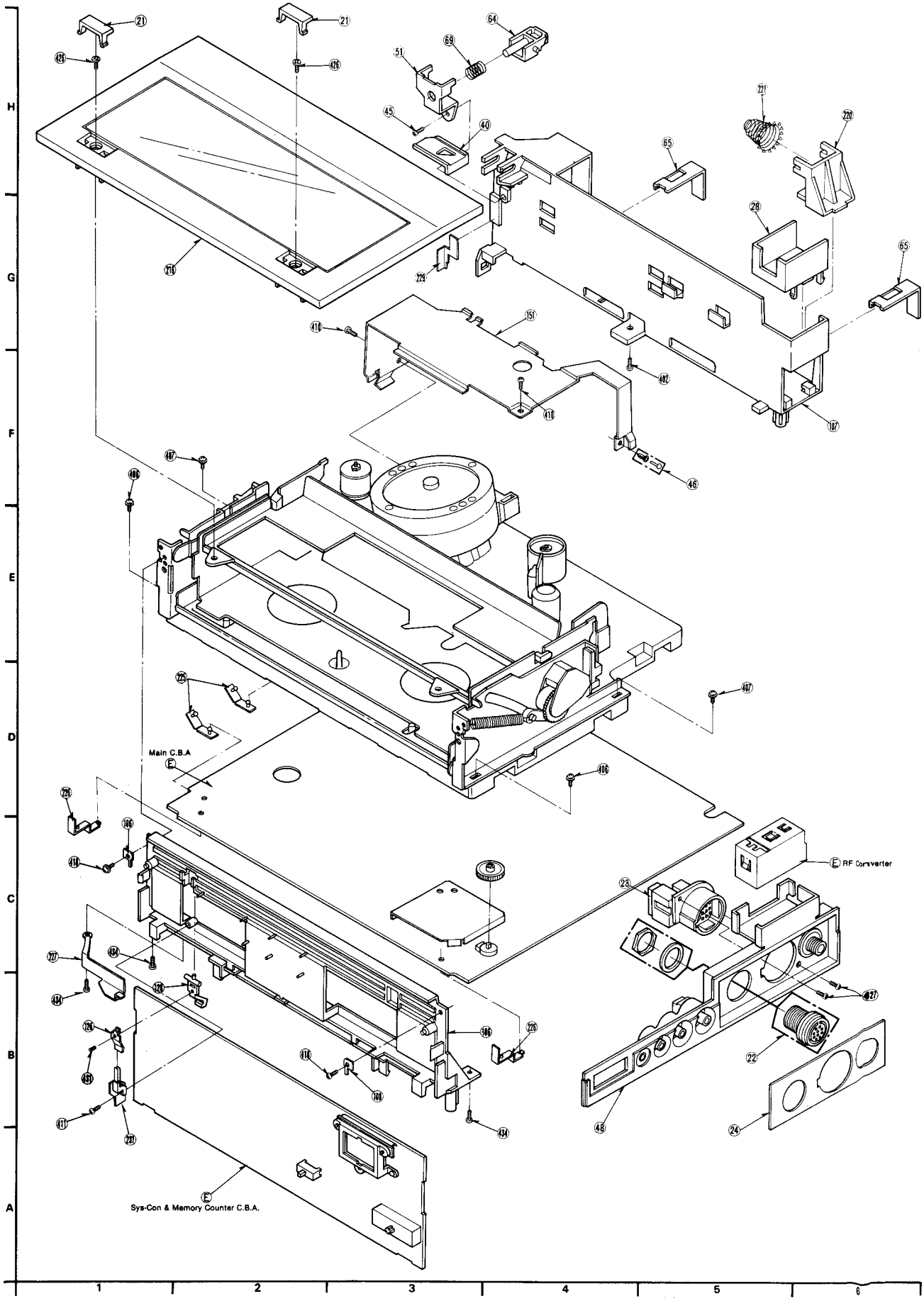

❻ *Casing Parts Section*

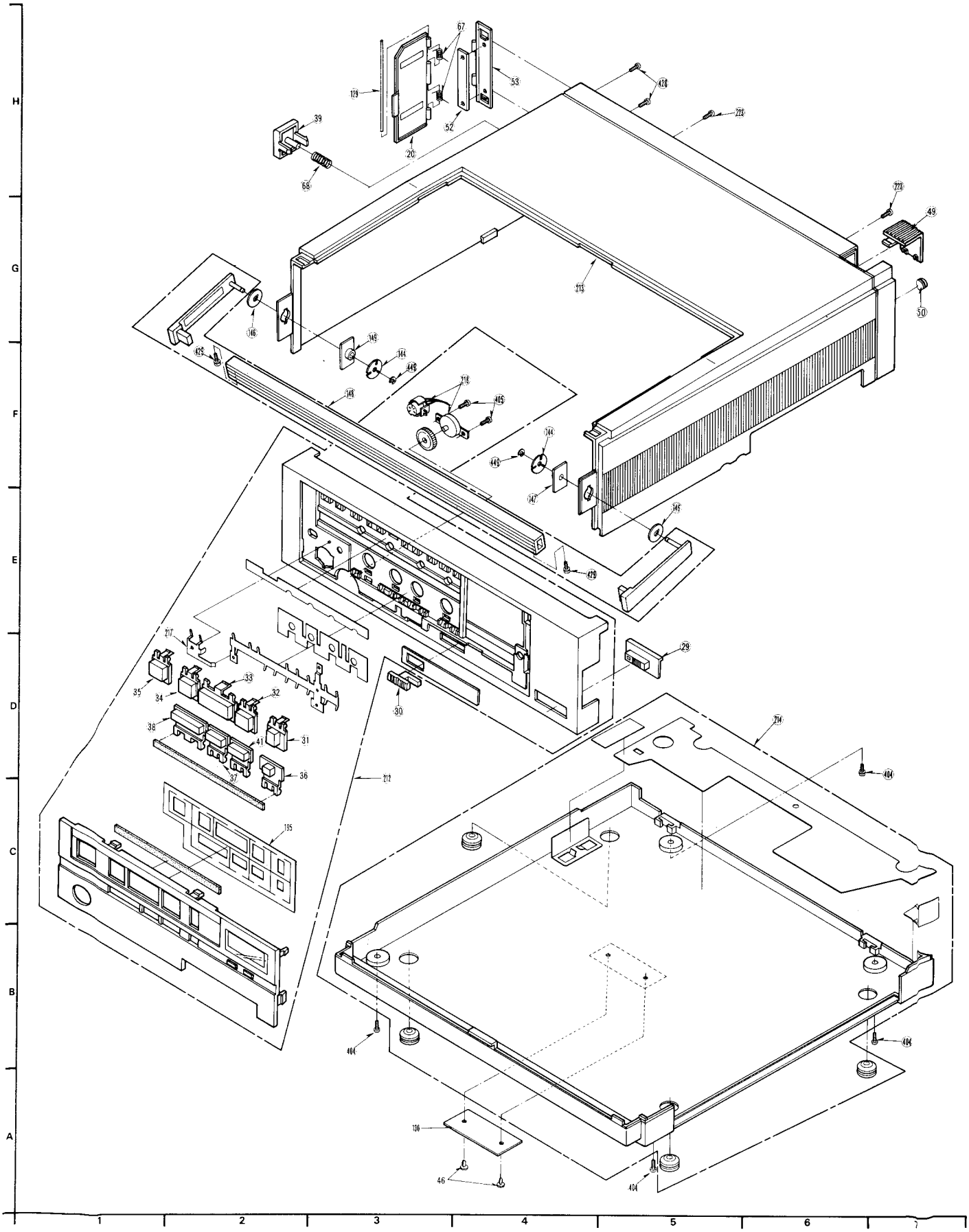

❼ *Packing Parts & Accessories Section*

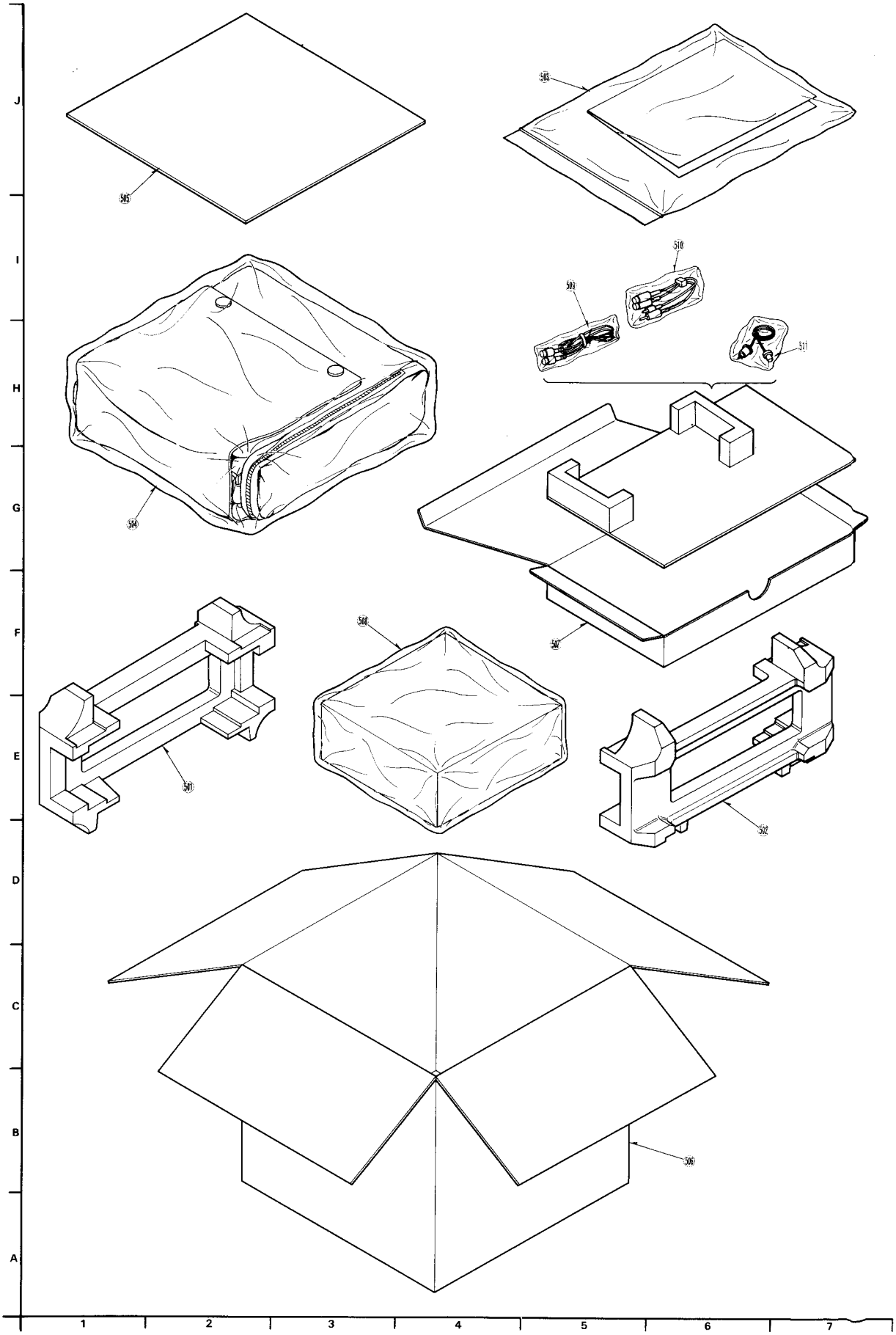

MECHANICAL REPLACEMENT PARTS LIST

Model No. NV-100E/B/EG

Notes:
1. * Be sure to make your orders of replacement parts according to this list.
   * "●" in Remarks column indicates new parts.

Ref. No.		Part No.	Part Name & Description	Pcs / Set	Remarks
1(3)		VBK0033	FG HEAD UNIT	1	
2(1)		VBS0021	FE HEAD	1	
3(3)		VDG0087	SECTOR GEAR (A)	1	
4(3)		VDG0088	SECTOR GEAR (B)	1	
5(3)		VDG0095	SUB CAM GEAR	1	
6(3)		VDG0094	MAIN CAM GEAR	1	
7(4)		VDG0098	DAMPER UNIT	1	
8(1)		VRH0009	HEATER UNIT	1	
10(1)		VXL0939	INERTIA ROLLER UNIT	1	
11(1)		VDP0759	SUPPLY ROLLER (K)	1	
12(2)		VDV0141	TIMING BELT	1	
13(1)		VEG0221	DD CYLINDER UNIT	1	
14(1)		VEH0171	UPPER CYLINDER UNIT	1	
15(1)		VEH0172	A/C HEAD UNIT	1	
16(3)		VEK1474	CAPSTAN STATOR COIL	1	
			P.C. BOARD UNIT		
18(3)		VEM0150	LOADING MOTOR UNIT	1	
20(6)		VKF0111	BATTERY DOOR	1	
21(5)		VGK1041	CASSETTE SCREW RUBBER	2	
22(5)		VEK1557	CAMERA JACK UNIT	1	
23(5)		VEE0057	MULTIPLE CONNECTOR UNIT	1	
24(5)		VGN1923	JACK PLATE DECORATION	1	
28(5)		VGQ0272	CHANNEL SELECT CASE	1	
29(6)		VGT0271	POWER SWITCH KNOB	1	
30(6)		VGT0272	CAMERA REMOTE SW KNOB	1	
31(6)		VGU0429	OPERATION BUTTON (REC)	1	
32(6)		VGU0430	OPERATION BUTTON (FF/CUE)	1	
33(6)		VGU0431	OPERATION BUTTON (PLAY)	1	
34(6)		VGU0432	OPERATION BUTTON	1	
			(REW/REVIEW)		
35(6)		VGU0433	OPERATION BUTTON (EJECT)	1	
36(6)		VGU0434	OPERATION BUTTON	1	
			(AUDIO DUBBING)		
37(6)		VGU0435	OPERATION BUTTON	1	
			(PAUSE/STILL)		
38(6)		VGU0436	OPERATION BUTTON (STOP)	1	
39(6)		VGU0497	BATTERY EJECT BUTTON	1	
40(5)		VGU0312	STOPPER RELEASE BUTTON	1	
41(6)		VGU0437	OPERATION BUTTON (SLOW)	1	
42(1)		VHD0081	SCREW	3	
43(1)		VHD0075	SCREW	1	
44(1)		VHN0020	ADJUST NUT	1	
45(5)		XTV3+6J	SCREW	1	
46(5,6)		VHN0030	PLASTIC RIVET	3	
47(1)		VJF0109	P.C. BOARD SUPPORT	3	
48(5)		VJH0224	JACK PLATE	1	
49(6)		VKF0110	CONVERTER COVER	1	
50(6)		VMG0220	RUBBER BUSHING	1	
51(5)		VMA4972	STOPPER COVER	1	
52(6)		VMA5799	BATTERY DOOR HOLDER	1	
53(6)		VKC0051	BATTERY DOOR HINGE	1	
54(1)		VMA4833	SHAFT HOLDER PLATE	2	
55(1)		VMA4834	LOADING GUIDE (L)	1	
56(1)		VMA4835	LOADING GUIDE (R)	1	
57(1)		VMA4876	CASSETTE OPENER COVER	1	
58(3)		VMA4887	THRUST ANGLE	1	
59(3)		VMA4886	CAPSTAN PLATE	1	
60(4)		VMA4843	CASSETTE HOLDER (B)	1	
61(1)		VMA4846	CASSETTE OPENER	1	
62(4)		VSH0016	CASSETTE LOCK DETECT SW	1	
63(4)		VSH0018	LEAF SW	1	
64(5)		VGQ0273	BATTERY STOPPER	1	
65(5)		VMA4971	FRAME SUPPORT ANGLE	2	
67(6)		VMB0966	BATTERY DOOR SPRING	2	
68(6)		VMB0967	BATTERY BUTTON SPRING	1	

Ref. No.		Part No.	Part Name & Description	Pcs / Set	Remarks
69(5)		VMB0968	SPRING	1	
71(1)		VMB0930	A/C HEAD SPRING	1	
72(1)		VMB0925	ERASE HEAD LEVER SPRING	1	
73(1)		VMB0934	SUPPLY LIMITER SPRING	1	
74(1)		VMB0936	POST SPRING	1	
75(1)		VMB0926	INERTIA ROLLER SPRING	1	
76(2)		VMB0941	ARM SPRING	1	
77(4)		VMB0933	TENSION ARM SPRING	1	
78(1)		VMB0931	LOADING SPRING	2	
79(2)		VMB0910	SPRING	1	
80(2)		VMB0971	PRESSURE ROLLER RETURN	1	
			SPRING		
81(2)		VMB0922	FF LEVER SPRING	1	
83(2)		VMB0939	MAIN IDLER SPRING	1	
84(2)		VMB0923	BRAKE LEVER SPRING	2	
85(2)		VMB0937	TAKE-UP SOFT ARM SPRING	1	
86(2)		VMB0911	TAKE-UP SOFT BRAKE SPRING	1	
87(2)		VMB0938	SUPPLY SOFT GUIDE SPRING	1	
88(2)		VMB0912	SUPPLY SOFT BRAKE SPRING	1	
89(3)		VMB0919	SUB ROD RETURN SPRING	1	
90(3)		VMB0920	SUB ROD SPRING	1	
91(3)		VMB0918	EJECT LEVER SPRING	1	
93(4)		VMB0929	CASSETTE HOLDER SPRING	2	
94(4)		VMB0927	LOCK ARM SPRING	2	
95(4)		VMB0916	LOCK RELEASE SPRING	2	
96(4)		VMB0914	CASSETTE HOLDING SPRING	1	
97(4)		VMB0915	CASSETTE HOLDER SPRING	1	
			(L)		
98(4)		VMB0917	DISCRIMINATING LEVER	1	
			SPRING		
99(2)		VMB0924	BRAKE ARM SPRING	2	
100(4)		VMB0988	SUB CASSETTE HOLDING	1	
			SPRING		
101(3)		VMB0980	LATCH SPRING	2	
102(4)		VMB0989	CASSETTE UP DETECT SPRING	1	
103(4)		VMB1021	SWITCH DRIVE SPRING	1	
105(1)		VMX0297	INERTIA ROLLER UPPER	1	
			LIMITER		
106(5)		VMZ0371	BARRIER (L)	1	
107(5)		VMD0343	REAR FRAME	1	
108(5)		VMZ0372	BARRIER (R)	1	
109(4)		VMD0334	ADJUST HOOK	1	
110(1)		VMD0331	POST STOPPER	2	
111(1)		VMD0324	LOADING GUIDE SUPPORT	1	
112(4)		VMD0326	TRANSISTOR HOLDER	2	
113(3)		VMD0354	GUIDE BLOCK	1	
114(1)		VEK1445	DEW DETECTOR UNIT	1	
115(1)		VMD0385	INCLIND SUPPORT ANGLE	1	
116(1)		VML1281	ERASE HEAD LEVER	1	
117(4)		VML1303	CASSETTE HOLDING LEVER	1	
118(3)		VML1305	EJECT KICK LEVER	1	
119(4)		VML1385	CASSETTE DOWN SW LEVER	1	
120(4)		VML1299	CASSETTE UP SW LEVER	1	
121(3)		VML1312	MAIN BRAKE KICK LEVER	1	
122(2)		VML1291	KICK LEVER	1	
123(3)		VML1357	LATCHET (A)	1	
124(3)		VML1358	LATCHET (B)	1	
125(2)		VML1289	TOGGLE ARM	1	
126(5)		VMA5914	ADJUST ANGLE	1	
127(4)		VML1304	DISCRIMINATING LEVER	1	
128(5)		VML1379	SAFETY LEVER	1	
129(6)		VMS2135	BATTERY DOOR SHAFT	1	
130(6)		VGN1925	RATED LABEL	1	NV-100E
130(6)		VGN1926	RATED LABEL	1	NV-100EG
130(6)		VGN1927	RATED LABEL	1	NV-100B
131(1)		VMS2094	INERTIA ROLLER LOWER	1	
			LIMITER		
132(1)		VMX0288	COLLAR	1	
133(1)		VMX0404	POST SLEEVE	1	
134(1)		VMX0373	POST CAP	1	

Ref. No.		Part No.	Part Name & Description	Pcs / Set	Remarks
135(1)		VMX0375	LOADING ARM SLEEVE	2	
136(2)		VMX0395	SLEEVE	1	
137(2)		VMX0394	SOFT BRAKE STOPPER	2	
138(3)		XWGV3D7G	SLIDE WASHER (A)	6	
139(3)		XWGV3D9G	SLIDE WASEHR (B)	2	
140(3)		VMX0381	EJECT LEVER STOPPER	1	
141(3)		VMX0396	THRUST BOSS	1	
142(3)		VMX0397	STARTER BRACKET	1	
143(2)		VMX0387	IDLER WASHER	2	
144(6)		VGQ0331	HANDLE SPACER	2	
145(2)		VMX0157	WASHER	2	
146(6)		VGQ0328	HANDLE WASHER	2	
147(6)		VMA5906	HANDLE SUPPORT ANGLE (R)	1	
148(6)		VYC0065	HANDLE UNIT	1	
149(6)		VMA5910	HANDLE SUPPORT ANGLE (L)	1	
151(5)		VSC0737	SHIELD CASE (TOP)	1	
152(3)		VSS0061	MODE SELECT SWITCH	1	
153(1)		VXA1481	SHAFT HOLDER L UNIT	1	
154(1)		VXA1484	SHAFT HOLDER R UNIT	1	
155(1)		VXA1482	INCLINED BASE L UNIT	1	
156(1)		VXA1485	INCLINED BASE R UNIT	1	
157(2)		VXL0938	FF IDLER LEVER UNIT	1	
158(2)		VMB0921	ROD SPRING	1	
159(2)		VXA1491	FF IDLER BRACKET 1 UNIT	1	
160(1)		VEK1461	SENSOR LED UNIT	1	
161(4)		VXA1495	CASSETTE UP UNIT	1	
162(5)		XTV3+10F	SCREW	1	
164(2)		VDP0858	ROLLER	1	
165(1)		VXP0302C	ROLLER POST R UNIT	1	
166(1)		VXP0302A	ROLLER POST L UNIT	1	
167(3)		VSA0040	GROUNDING PLATE	1	
168(2)		VXD0068	HOUSING	1	
169(1)		VXL0910	LOADING ARM L-1 UNIT	1	
170(1)		VXL0912	LOADING ARM R-1 UNIT	1	
171(3)		VML0970	RELEASE LINK	1	
172(3)		VXL0918	ARM KICK LEVER UNIT	1	
173(2)		VXL0920	IDLER LEVER UNIT	1	
174(2)		VXL0922	MAIN IDLER LEVER 1 UNIT	1	
175(2)		VXL0923	SUB IDLER LEVER UNIT	1	
176(2)		VXA1487	IDLER SUPPORT UNIT	1	
177(2)		VXZ0119	TAKE-UP SOFT ARM UNIT	1	
178(2)		VXZ0120	TAKE-UP SOFT GUIDE UNIT	1	
179(2)		VXL0935	SUPPLY SOFT ARM UNIT	1	
180(2)		VXL0934	SUPPLY SOFT GUIDE UNIT	1	
181(2)		VXL0936	TRANSMITTING ARM UNIT	1	
182(2)		VXL0937	P5 ARM UNIT	1	
183(1)		VMB0908	HEATER SPRING	1	
184(2)		VXL0927	PRESSURE ROLLER ARM 1	1	
			UNIT		
185(2)		VXL0929	CONNECTING ARM UNIT	1	
186(2)		VXL0930	BRAKE LEVER L UNIT	1	
187(2)		VXZ0122	BRAKE ARM L UNIT	1	
188(2)		VXL0931	BRAKE LEVER R UNIT	1	
189(2)		VXZ0124	BRAKE ARM R UNIT	1	
190(4)		VXL0933	TENSION ARM	1	
191(4)		VXZ0125	TENSION BAND UNIT	1	
195(2)		VMG0259	IDLER TIRE	1	
197(3)		VXL0914	SUB ROD 1 UNIT	1	
198(3)		VXL0917	MAIN ROD 1 UNIT	1	
199(3)		VXP0408	ROTOR UNIT	1	
200(2)		VXP0402	SUPPLY REEL IDLER GEAR	1	
			UNIT		
201(2)		VXP0403	TAKE-UP REEL IDLER UNIT	1	
202(2)		VXP0405	MAIN IDLER 1 UNIT	1	
203(2)		VDP0854	FF IDLER	1	
204(1)		VXP0411	LOADING GEAR L UNIT	1	
205(1)		VXP0412	LOADING GEAR R UNIT	1	
206(3)		VXA1486	SECTOR GEAR C UNIT	1	
207(2)		VXP0413	TRANSMITTING GEAR UNIT	1	
208(2)		VXR0095	SUPPLY REEL TABLE UNIT	1	

Ref. No.		Part No.	Part Name & Description	Pcs / Set	Remarks
209(2)		VXR0096	TAKE-UP REEL TABLE UNIT	1	
210(2)		VMG0258	FF IDLER TIRE	1	
212(6)		VYP0666	FRONT PANEL UNIT	1	
213(6)		VGP0726	TOP CASE	1	
214(6)		VYK0421	BOTTOM CASE UNIT	1	
216(5)		VYK0420	CASSETTE COVER UNIT	1	
217(6)		VEK1756	EARTH ANGLE	1	
218(6)		VEK1856	REMOTE CONNECTOR UNIT	1	
220(5)		VJF0106	BATTERY CATCHER	1	
221(5)		VMB0969	BATTERY CATCHER SPRING	1	
222(1)		VHD0045	NYLON NUT	1	
223(6)		VHD0087	TOP PANEL SCREW	2	
224(1,2)		VHN0023	NYLON NUT	3	
225(5)		VKC0052	HINGE	2	
226(5)		VKC0053	HINGE	2	
227(5)		VEK1769	GROUND ANGLE	1	
228(2)		VMB0940	SUB LEVER SPRING	1	
229(1)		VEK1827	Shield Cover Unit	1	
230(1)		VHD0075	Shield Cover Screw	1	
231(5)		VEK1758	SAFETY TAB SW.	1	
401		XTV3+8J		1	
402		XTV3+10F		1	
403		XTV3+6J		1	
404		XTV3+14FZ		4	
405		XTV2+5J		2	
406		XTV26+6F		16	
407		XTV26+8F		20	
408		XTV26+10F		1	
409		XTV26+12F		2	
410		XTV26+6FRS		2	
411		XTV26+8J		1	
412		XTN26+35F		4	
413		XYN3+B8BNS		2	
414		XYN26+A5		2	
415		XYE26+BF6		2	
416		XYN26+F6		5	
417		XYN26+C6FZ		4	
418		XYN26+F8		2	
419		XYN26+E10		2	
420		XYN26+C6		1	
421		XYN3+C4		2	
422		XYN2+C6		1	
423		XYE26+BF10		4	
424		XYE26+BF5		3	
425		XYE26+BF8		1	
426		XSB3+6FKS		2	
427		XSS26+2		2	
428		XSS2+5FXKS		2	
429		XSS26+8FXKS		2	
430		XSN2+35		1	

Ref. No.		Part No.	Part Name & Description	Pcs / Set	Remarks
431		XXEV0001		1	
432		XXEV2D2FP		2	
433		XTV3+6F		1	
434		XTV3+8F		3	
435		XTS3+12F		1	
436		XUEV3VW		24	
437		XUEV2VW		2	
438		XUC25FP		5	
439		XUC3FP		10	
440		XUC2FP		5	
441		XUC15FP		1	
442		XWGV2D4G		2	
443		XWGV3D6G		15	
444		XWGV4D65		2	
445		XWGV45Y9G		2	
446		XWGV25Y47G		3	
447		XWGV3D7G		8	
448		XWG3		1	
449		XUC4FP		2	
501(7)		VPN0776	CUSHION (L)	1	
502(7)		VPN0777	CUSHION (R)	1	
503(7)		VQF0828	FAN BAG	1	NV-100E
503(7)		VQF0826	FAN BAG	1	NV-100EG
503(7)		VQF0827	FAN BAG	1	NV-100B
504(7)		VFC0015	CARRYING CASE	1	NV-100E/B
504(7)		VFC0014	CARRYING CASE	1	NV-100EG
505(7)		VPN0789	UPPER CUSHION	1	
506(7)		VPG1144	PACKING CASE	1	NV-100E
506(7)		VPG1142	PACKING CASE	1	NV-100EG
506(7)		VPG1143	PACKING CASE	1	NV-100B
507(7)		VPN0778	ACCESSORY CASE	1	
508(7)		VPF0164	POLYETHYLENE BAG	1	
509(7)		VJA0130	DIN-RF CABLE	1	
510(7)		VJP1164	MIC ATTENUATOR	1	
511(7)		VBE0003	EARPHONE	1	

ELECTRICAL REPLACEMENT PARTS LIST

Model No. NV-100E/B/EG

Notes:
1. • Be sure to make your orders of replacement parts according to this list.
2. IMPORTANT SAFETY NOTICE
   Components identified by ⚠ have special characteristics important for safety.
   When replacing any of these components, use only the original ones.
3. Unless otherwise specified,
   All resistors are in OHMS (Ω), 1/8W ± 5% carbon. K=1,000Ω, M=1,000KΩ.
   All capacitors are in MICROFARADS (μF), ± 10% P=μμF.

Ref. No.		Part No.	Part Name & Description	Pcs / Set	Remarks
		VEP03137A	Main P.C.B. Unit	1	NV-100E/B
		VEP03137B	Main P.C.B. Unit	1	NV-100EG
		VEP06164A	System Control & Memory Counter P.C.B. Unit	1	
		VEP02148B	Cylinder Motor Drive P.C.B. Unit	1	
		VEK1475	Capstan Motor Drive P.C.B. Unit	1	
		VEP06165B	Back-Up Circuit P.C.B. Unit	1	
		VJB00799	Full Erase Head P.C.B.	1	
		VJB00802	Supply Reel Detector P.C.B.	1	
		VJB00801	Take-up Reel Detector P.C.B.	1	
		VJB00796	Take-up Photo TR P.C.B.	1	
		VJB00901	Supply Photo TR P.C.B.	1	
		VJB00896	Safety Tab Switch P.C.B.	1	
		VJB00803	FG Head P.C.B.	1	
		ENC17553	RF Converter	1	NV-100E/EG ⚠
		ENC17554	RF Converter	1	NV-100B ⚠
		VEP03137A	Main P.C Board Unit		NV-100E/B
		VEP03137B			NV-100EG
			AVR Section		
			Integrated Circuits		
IC1001		BA6122A		1	
IC1002		VCR0044		1	
			Transistors		
Q1001,1002		2SB835		2	(Q,R)
Q1003		2SB772		1	(P,Q)
Q1004		2SD992		1	(K,L)
Q1005		2SB641		1	(Q,R)
Q1006-1008		2SD636		3	(Q,R)
Q1009		2SD889		1	(Q,R,S)
Q1010		2SB835		1	(Q,R)
Q1011		2SB819		1	(Q,R)
Q1012		2SB643		1	(Q,R)
			Diodes		
D1001-1004		11DQ04FE7		4	
D1005,1006		MA165		2	
			Resistors		
R1001		ERDS2TJ253	1/4W 15K	1	
R1002		ERDS2TJ393	1/4W 39K	1	
R1003,1004		ERDS2TJ103	1/4W 10K	2	
R1005		ERDS2TJ333	1/4W 33K	1	
R1006		ERDS2TJ331	1/4W 330	1	
R1007		ERDS2TJ182	1/4W 1.8K	1	
R1008		ERDS2TJ391	1/4W 390	1	
R1009		ERDS2TJ222	1/4W 2.2K	1	
R1010		ERDS2TJ331	1/4W 330	1	
R1011		ERDS2TJ681	1/4W 680	1	
R1012		ERDS2TJ122	1/4W 1.2K	1	
R1013		ERDS2TJ1R0	1/4W 1.0	1	
R1014		ERX12ANJR56	Metal 1/2W 0.56	1	
R1015		ERDS2TJ333	1/4W 33K	1	
R1016		ERDS2TJ104	1/4W 100K	1	
R1017		ERDS2TJ273	1/4W 27K	1	
R1018		ERDS2TJ183	1/4W 18K	1	
R1019,1020		ERDS2TJ473	1/4W 47K	2	
R1021		ERDS2TJ472	1/4W 4.7K	1	
R1022		ERDS2TJ123	1/4W 12K	1	
R1023		ERDS2TJ333	1/4W 33K	1	
R1024		ERDS2TJ104	1/4W 100K	1	
R1025		ERDS2TJ563	1/4W 56K	1	
R1026		ERDS2TJ332	1/4W 3.3K	1	
R1027		ERDS2TJ123	1/4W 12K	1	
R1028		ERDS2TJ122	1/4W 1.2K	1	
R1029,1030		EVN3ACA00B54	Variable 50K	2	
			Capacitors		
C1001		ECCF1H390K	Ceramic 50V 39P	1	
C1002,1003		ECCF1H221K	Ceramic 50V 220P	2	
C1004		ECKF1H103ZF	Ceramic 50V 0.01	1	
C1005		ECKF1H331KB	Ceramic 50V 330P	1	
C1006,1007		ECEA1CSS221	Electrolytic 16V 220	2	
C1008		ECEA1CSS101	Electrolytic 16V 100	1	
C1009,1010		ECEA1ASS221	Electrolytic 10V 220	2	
C1011,1012		ECEA0JSS221	Electrolytic 6.3V 220	2	
C1013		ECEA0JK330	Electrolytic 6.3V 33	1	
C1014		ECEA0JK101	Electrolytic 6.3V 100	1	
C1015		ECEA1HK010	Electrolytic 50V 1	1	
			Coils		
L1001-1003		VLQ0085		3	
L1004-1006		VLS0084		3	
L1007		VLQ0083		1	
			Fuses		
F1001		XBA2C05TR0		1	⚠
F1002		VSF0021		1	⚠

Ref. No.		Part No.	Part Name & Description	Pcs / Set	Remarks
			Servo Section		
			Integrated Circuits		
IC2001		AN6357		1	
IC2002		MN6165VBA		1	
IC2003		AN6356		1	
IC2004		MN6281		1	
IC2005		AN6562		1	
IC2006		VCR0053		1	
IC2007		MN1453VFD		1	
IC2008		AN6914		1	
IC2009		VCR0055		1	
			Transistors		
Q2001,2002		2SD636		2	(Q,R,S)
Q2003		2SC2603		1	(E2,F)
Q2004,2005		2SD636		2	(Q,R,S)
Q2006		2SA1115		1	(E,F)
Q2007		2SD636		1	(Q,R,S)
Q2014		2SD636		1	(Q,R,S)
Q2015		2SA1115		1	(E,F)
Q2016,2017		2SD636		2	(Q,R,S)
Q2018		2SC2603		1	(E2,F)
Q2019,2020		2SD636		2	(Q,R,S)
Q2022		2SA1115		1	(E,F)
			Diodes		
D2001-2007		MA165		7	
D2009		MA165		1	
D2011-2013		MA165		3	
			Resistors		
R2001,2002		ERDS2TJ104	1/4W 100K	2	
R2003		ERDS2TJ123	1/4W 12K	1	
R2004		ERDS2TJ223	1/4W 22K	1	
R2005		ERDS2TJ563	1/4W 56K	1	
R2006		ERDS2TJ224	1/4W 220K	1	
R2007		ERDS2TJ103	1/4W 10K	1	
R2008		ERDS2TJ183	1/4W 18K	1	
R2009		ERDS2TJ105	1/4W 1M	1	
R2010		ERDS2TJ122	1/4W 1.2K	1	
R2011		ERPF3A4M402S	Thermistor 4K	1	
R2012		ERDS2TJ473	1/4W 47K	1	
R2013		EVN3ACA00B15	Variable 100K	1	
R2014		ERDS2TJ473	1/4W 47K	1	
R2015		ERDS2TJ272	1/4W 2.7K	1	
R2016		ERDS2TJ333	1/4W 33K	1	
R2017		ERDS2TJ103	1/4W 10K	1	
R2018		ERDS2TJ332	1/4W 3.3K	1	
R2019		ERDS2TJ102	1/4W 1K	1	
R2020,2021		ERDS2TJ103	1/4W 10K	2	
R2022		ERDS2TJ473	1/4W 47K	1	
R2023		ERDS2TJ122	1/4W 1.2K	1	
R2024		ERDS2TJ154	1/4W 150K	1	
R2025		ERDS2TJ224	1/4W 220K	1	
R2026		ERDS2TJ154	1/4W 150K	1	
R2027		ERDS2TJ104	1/4W 100K	1	
R2028,2029		ERDS2TJ154	1/4W 150K	2	
R2030		ERDS2TJ124	1/4W 120K	1	
R2031		ERDS2TJ333	1/4W 33K	1	
R2032		ERDS2TJ222	1/4W 2.2K	1	
R2035		ERDS2TJ103	1/4W 10K	1	
R2036		ERDS2TJ334	1/4W 330K	1	
R2037		ERDS2TJ105	1/4W 1M	1	

Ref. No.		Part No.	Part Name & Description	Pcs / Set	Remarks
R2039		ERDS2TJ563	1/4W 56K	1	
R2040		ERDS2TJ183	1/4W 18K	1	
R2041		ERDS2TJ223	1/4W 22K	1	
R2042		ERDS2TJ154	1/4W 150K	1	
R2043		ERDS2TJ274	1/4W 270K	1	
R2044		ERDS2TJ563	1/4W 56K	1	
R2045		ERDS2TJ682	1/4W 6.8K	1	
R2046		EVN3ACA00B15	Variable 100K	1	
R2047		ERDS2TJ223	1/4W 22K	2	
R2048		ERDS2TJ154	1/4W 150K	1	
R2049,2050		ERDS2TJ104	1/4W 100K	2	
R2051		ERDS2TJ472	1/4W 4.7K	1	
R2052		ERDS2TJ222	1/4W 2.2K	1	
R2053		ERDS2TJ181	1/4W 180	1	
R2055		EVN3ACA00B25	Variable 200K	1	
R2056		ERDS2TJ563	1/4W 56K	1	
R2057		ERDS2TJ154	1/4W 150K	1	
R2058		EVN3ACA00B25	Variable 200K	1	
R2059		ERDS2TJ393	1/4W 39K	1	
R2060		ERDS2TJ103	1/4W 10K	1	
R2061		ERDS2TJ562	1/4W 5.6K	1	
R2062		ERDS2TJ103	1/4W 10K	1	
R2063		ERDS2TJ271	1/4W 270	1	
R2064		ERDS2TJ471	1/4W 470	1	
R2065		ERDS2TJ104	1/4W 100K	1	
R2066		ERDS2TJ223	1/4W 22K	1	
R2067		EVN3ACA00B24	Variable 20K	1	
R2068		ERDS2TJ153	1/4W 15K	1	
R2069		ERDS2TJ332	1/4W 3.3K	1	
R2070		ERDS2TJ222	1/4W 2.2K	1	
R2071		ERDS2TJ334	1/4W 330K	1	
R2072		ERDS2TJ104	1/4W 100K	1	
R2073		ERDS2TJ224	1/4W 220K	1	
R2074		ERDS2TJ103	1/4W 10K	1	
R2075		ERDS2TJ332	1/4W 3.3K	1	
R2076		ERDS2TJ562	1/4W 5.6K	1	
R2077,2078		ERDS2TJ104	1/4W 100K	2	
R2079		EVN3ACA00B25	Variable 200K	1	
R2080		ERDS2TJ823	1/4W 82K	1	
R2081-2084		ERDS2TJ563	1/4W 56K	4	
R2085		ERDS2TJ562	1/4W 5.6K	1	
R2086		ERDS2TJ104	1/4W 100K	1	
R2087		ERDS2TJ563	1/4W 56K	1	
R2088		ERDS2TJ562	1/4W 5.6K	1	
R2089		ERDS2TJ224	1/4W 220K	1	
R2090		ERDS2TJ103	1/4W 10K	1	
R2091		ERDS2TJ223	1/4W 22K	1	
R2093		ERDS2TJ104	1/4W 100K	1	
R2094		ERDS2TJ394	1/4W 390K	1	
R2095		ERDS2TJ124	1/4W 120K	1	
R2096		ERDS2TJ154	1/4W 150K	1	
R2097		ERDS2TJ331	1/4W 330	1	
R2098		ERDS2TJ221	1/4W 220	1	
			Capacitors		
C2001		ECCF1H470K	Ceramic 50V 47P	1	
C2002		ECEA0JK010	Electrolytic 6.3V 1	1	
C2003		ECWM1H102KZ	Mylar 50V 0.001	1	
C2004		ECEA0EKN2R2	Electrolytic 25V 2.2	1	
C2005		ECWM1H152KZ	Mylar 50V 0.0015	1	
C2006		ECSF16ER1	Tantalum 16V 0.1	1	
C2007		ECKF1H222KB	Ceramic 50V 2200P	1	
C2008		ECEA1HKR33	Electrolytic 50V 0.33	1	
C2009		ECEA1HKN010	Electrolytic 50V 1	1	
C2010		ECEA1EKN2R2	Electrolytic 25V 2.2	1	
C2011		ECEA1HK010	Electrolytic 50V 1	1	
C2012,2013		ECWM1H562KZ	Mylar 50V 0.0056	2	

Ref. No.		Part No.	Part Name & Description	Pcs / Set	Remarks
C2014		ECSF16ER1	Tantalum 16V 0.1	1	
C2015,2016		ECEA0JK470	Electrolytic 6.3V 47	2	
C2017		ECEA1CK100	Electrolytic 16V 10	1	
C2018		ECEA1HK010	Electrolytic 50V 1	1	
C2019		ECCF1H050CC	Ceramic 50V 5P	1	
C2020		ECWM1H562KZ	Mylar 50V 0.0056	1	
C2021		ECEA1HK0R1	Electrolytic 50V 0.1	1	
C2022,2023		ECEA0JK470	Electrolytic 6.3V 47	2	
C2024		ECWN1H182KZ	Mylar 50V 0.0018	1	
C2025,2026		ECEA1CK100	Electrolytic 16V 10	2	
C2027		ECEA0JK470	Electrolytic 6.3V 47	1	
C2028		ECWM1H223KZ	Mylar 50V 0.022	1	
C2029		ECEA0JK470	Electrolytic 6.3V 47	1	
C2030		ECWM1H472KZ	Mylar 50V 0.0047	1	
C2031		ECWM1H123KZ	Mylar 50V 0.012	1	
C2032		ECV1ZW20X53N	Trimmer 500V 20P	1	
C2033		ECWM1H472KZ	Mylar 50V 0.0047	1	
C2035		ECEA0JK470	Electrolytic 6.3V 47	1	
C2036		ECEA1CK100	Electrolytic 16V 10	1	
C2037		ECEA1HK2R2	Electrolytic 50V 2.2	1	
C2038		ECCF1H270KC	Ceramic 50V 27P	1	
C2039		ECWM1H153KZ	Mylar 50V 0.015	1	
C2040		ECWM1H332KZ	Mylar 50V 0.0033	1	
C2041		ECEA1HK3R3	Electrolytic 50V 3.3	1	
C2042		ECEA0JK470	Electrolytic 6.3V 47	1	
C2043		ECEA1HKR22	Electrolytic 50V 0.22	1	
C2044		ECWM1H223KZ	Mylar 50V 0.022	1	
C2045		ECEA1AK220	Electrolytic 10V 22	1	
C2046		ECQV05184JZ	Mylar 0.18	1	
C2047		ECEA1HK010	Electrolytic 50V 1	1	
C2048		ECKF1H472KB	Ceramic 50V 4700P	1	
			Coils		
L2001		VLQEL06F471K	470μH	1	
L2002		VLQEL05R220K	22μH	1	
			Crystal		
X2001		VSX0091		1	

Ref. No.		Part No.	Part Name & Description	Pcs / Set	Remarks
			Luminance Section		
			Integrated Circuits		
IC3001		VEFY003	FIC Y-3	1	
IC3002		VCR0042		1	
IC3003		AN6326		1	
IC3004		VCR0043		1	
			Transistors		
Q3001		2SD636		1	(Q,R,S)
Q3002		2SC2206		1	(B,C)
Q3003		2SD636		1	(Q,R,S)
Q3004-3006		2SC2206		3	(B,C)
Q3007		2SD636		1	(Q,R,S)
Q3008		2SB641		1	(Q,R)
Q3009,3010		2SC2206		2	(B,C)
Q3012,3013		2SD636		2	(Q,R,S)
Q3014,3015		2SC2206		2	(B,C)
			Diodes		
D3001,3002		MA165		2	
D3003		RD3.3EB	Zener	1	
D3004-3006		1SS99		3	
D3007		MA165		1	
D3008,3009		1SS99		2	
			Resistors		
R3001,3002		ERDS2TJ103	1/4W 10K	2	
R3003		ERDS2TJ102	1/4W 1K	1	
R3004		ERDS2TJ271	1/4W 270	1	
R3005		ERDS2TJ681	1/4W 680	1	
R3006		ERDS2TJ102	1/4W 1K	1	
R3007		ERDS2TJ222	1/4W 2.2K	1	
R3008		ERDS2TJ100	1/4W 10	1	
R3009		ERDS2TJ331	1/4W 330	1	
R3010		ERDS2TJ684	1/4W 680K	1	
R3011		EVN3ACA00B13	Variable 1K	1	
R3012		ERDS2TJ820	1/4W 82	1	
R3013		ERDS2TJ821	1/4W 820	1	
R3014		ERDS2TJ681	1/4W 680	1	
R3015,3016		ERDS2TJ393	1/4W 39K	2	
R3017		ERDS2TJ470	1/4W 47	1	
R3018,3019		ERDS2TJ100	1/4W 10	2	
R3020,3021		EVN3ACA00B13	Variable 1K	2	
R3022		ERDS2TJ391	1/4W 390	1	
R3023		ERDS2TJ102	1/4W 1K	1	
R3024		ERDS2TJ391	1/4W 390	1	
R3025,3026		ERDS2TJ102	1/4W 1K	2	
R3027		ERDS2TJ152	1/4W 1.5K	1	
R3028		ERDS2TJ681	1/4W 680	1	
R3029		ERDS2TJ152	1/4W 1.5K	1	
R3030		ERDS2TJ471	1/4W 470		
R3031		ERDS2TJ152	1/4W 1.5K	1	
R3032		ERDS2TJ561	1/4W 560	1	
R3033		ERDS2TJ103	1/4W 10K	1	
R3034		ERDS2TJ102	1/4W 1K	1	
R3035		ERDS2TJ270	1/4W 27	1	
R3036		ERDS2TJ561	1/4W 560	1	
R3037		ERDS2TJ392	1/4W 3.9K	1	
R3038		ERDS2TJ152	1/4W 1.5K	1	
R3039		ERDS2TJ102	1/4W 1K	1	
R3040		ERDS2TJ331	1/4W 330	1	
R3041		ERDS2TJ561	1/4W 560	1	
R3043		ERDS2TJ102	1/4W 1K	1	
R3044		ERDS2TJ222	1/4W 2.2K	1	

Ref. No.		Part No.	Part Name & Description			Pcs / Set	Remarks
R3045		ERDS2TJ102		1/4W	1K	1	
R3046		ERDS2TJ152		1/4W	1.5K	1	
R3047,3048		ERDS2TJ103		1/4W	10K	2	
R3049		ERDS2TJ152		1/4W	1.5K	1	
R3050		ERDS2TJ122		1/4W	1.2K	1	
R3051		ERDS2TJ222		1/4W	2.2K	1	
R3052		ERDS2TJ472		1/4W	4.7K	1	
R3053		ERDS2TJ561		1/4W	560	1	
R3054		ERDS2TJ683		1/4W	68K	1	
R3055		ERDS2TJ223		1/4W	22K	1	
R3057		ERDS2TJ273		1/4W	27K	1	
R3058		ERDS2TJ223		1/4W	22K	1	
R3059,3060		ERDS2TJ561		1/4W	560	2	
R3061		ERDS2TJ121		1/4W	120	1	
R3062		ERDS2TJ561		1/4W	560	1	
R3063		EVN3ACA00B23	Variable		2K	1	
R3064		ERDS2TJ471		1/4W	470	1	
R3065		ERDS2TJ271		1/4W	270	1	
R3066		ERDS2TJ473		1/4W	47K	1	
R3067		ERDS2TJ271		1/4W	270	1	
R3068		ERDS2TJ473		1/4W	47K	1	
R3069		ERDS2TJ471		1/4W	470	1	
R3070		ERDS2TJ271		1/4W	270	1	
R3071		ERDS2TJ102		1/4W	1K	1	
R3072		ERDS2TJ471		1/4W	470	1	
R3073		ERDS2TJ561		1/4W	560	1	
R3076		ERDS2TJ102		1/4W	1K	1	
R3077		ERDS2TJ332		1/4W	3.3K	1	
R3078		ERDS2TJ392		1/4W	3.9K	1	
R3079,3080		ERDS2TJ104		1/4W	100K	2	
R3081		ERDS2TJ680		1/4W	68	1	
R3082		ERDS2TJ561		1/4W	560	1	
R3083,3084		ERDS2TJ102		1/4W	1K	2	
R3085		ERDS2TJ681		1/4W	680	1	
R3086,3087		ERDS2TJ154		1/4W	150K	2	
R3088		ERDS2TJ102		1/4W	1K	1	
R3089		ERDS2TJ681		1/4W	680	1	
			Capacitors				
C3001		ECEA1EK4R7	Electrolytic	25V	4.7	1	
C3002		VCYD1C104MX	Semiconductor	16V	0.1	1	
C3003		ECEA1HK010	Electrolytic	50V	1	1	
C3004,3005		ECEA0JK470	Electrolytic	6.3V	47	2	
C3006		ECEA1HK2R2	Electrolytic	50V	2.2	1	
C3007		ECEA0JK101	Electrolytic	6.3V	100	1	
C3008		ECWM1H333KZ	Mylar	50V	0.033	1	
C3009,3010		ECEA1HK010	Electrolytic	50V	1	2	
C3011		ECCF1H151K	Ceramic	50V	150P	1	
C3012		ECEA1CK100	Electrolytic	16V	10	1	
C3013		ECEA1EK4R7	Electrolytic	25V	4.7	1	
C3014		ECEA1HK2R2	Electrolytic	50V	2.2	1	
C3015		ECKF1H122KB	Ceramic	50V	1200P	1	
C3016,3017		ECKF1H103ZF	Ceramic	50V	0.01	2	
C3018		ECEA1AK330	Electrolytic	10V	33	1	
C3019		ECSF16E1	Tantalum	16V	1	1	
C3020		ECEA1CK100	Electrolytic	16V	10	1	
C3021		VCYD1C104MX	Semiconductor	16V	0.1	1	
C3022		ECEA0JK470	Electrolytic	6.3V	47	1	
C3023		ECEA1CK100	Electrolytic	16V	10	1	
C3024		ECV1ZW60X64	Trimmer	500V	60P	1	
C3025		VCYD1C104MX	Semiconductor	16V	0.1	1	
C3026		ECV1ZW60X64	Trimmer	500V	60P	1	
C3027		VCYD1C104MX	Semiconductor	16V	0.1	1	
C3028		ECEA1CK100	Electrolytic	16V	10	1	
C3029		ECEA0JK470	Electrolytic	6.3V	47	1	
C3030		ECEA1HK010	Electrolytic	50V	1	1	
C3031		ECKF1H103ZF	Ceramic	50V	0.01	1	
C3032		ECCF1H560K	Ceramic	50V	56P	1	
C3033		ECCF1H270KC	Ceramic	50V	27P	1	

Ref. No.		Part No.	Part Name & Description			Pcs / Set	Remarks
C3034		ECKF1H561KB	Ceramic	50V	560P	1	
C3035		ECCF1H560K	Ceramic	50V	56P	1	
C3036		ECKF1H821KB	Ceramic	50V	820P	1	
C3037		ECKF1H103ZF	Ceramic	50V	0.01	1	
C3038		ECCF1H151K	Ceramic	50V	150P	1	
C3039		ECCF1H271J	Ceramic	50V	270P	1	
C3040		ECKF1H103ZF	Ceramic	50V	0.01	1	
C3041		ECCF1H390K	Ceramic	50V	39P	1	
C3042		ECKF1H103ZF	Ceramic	50V	0.01	1	
C3043		ECCF1H120K	Ceramic	50V	12P	1	
C3044		ECKF1H103ZF	Ceramic	50V	0.01	1	
C3045		ECEA0JK470	Electrolytic	6.3V	47	1	
C3047		ECKF1H221KB	Ceramic	50V	220P	1	
C3048		ECEA0JK101	Electrolytic	6.3V	100	1	
C3049,3050		ECEA1CN100	Electrolytic	16V	10	2	
C3051		ECCF1H101K	Ceramic	50V	100P	1	
C3052		ECWM1H182JZ	Mylar	50V	0.0018	1	
C3053		ECCF1H820K	Ceramic	50V	82P	1	
C3054		ECCF1H151K	Ceramic	50V	150P	1	
C3055		ECEA0JK220	Electrolytic	6.3V	22	1	
C3056,3057		ECEA1AK330	Electrolytic	10V	33	2	
C3058		ECKF1H122KB	Ceramic	50V	1200P	1	
C3059,3060		ECEA0JSS221	Electrolytic	6.3V	220	2	
C3061		ECEA0JK220	Electrolytic	6.3V	22	1	
C3062		ECEA1CK100	Electrolytic	16V	10	1	
C3063		ECEA1ASS101	Electrolytic	10V	100	1	
C3064		ECCP1H560K	Ceramic	50V	56P	1	
C3065		ECEA0JSS221	Electrolytic	6.3V	220	1	
C3066		ECEA0JK101	Electrolytic	6.3V	100	1	
C3067		ECKF1H102KB	Ceramic	50V	1000P	1	
C3068		ECCF1H220K	Ceramic	50V	22P	1	
C3069		ECCF1H470	Ceramic	50V	47P	1	
C3070		ECCF1H820K	Ceramic	50V	82P	1	
C3146		ECKF1H103ZF	Ceramic	50V	0.01	1	
			Coils				
L3001-3003		VLQEL05R101K			100μH	3	
L3004		VLQEL05R270K			27μH	1	
L3005		VLQEL05R2R2K			2.2μH	1	
L3006		VLQEL05R101K			100μH	1	
L3007		VLQEL05R270K			27μH	1	
L3008		VLQEL06F471K			470μH	1	
L3009		VLQEL05R680K			68μH	1	
L3010		VLQEL05R180K			18μH	1	
L3011		VLQEL05R3R3K			3.3μH	1	
L3012		VLQEL06R102K			1mH	1	
L3014		VLQEL05R101K			100μH	1	
L3015		VLQEL05R220K			22μH	1	
L3016		VLQEL05R680K			68μH	1	
L3017		VLQEL05R101K			100μH	1	
L3018		VLQEL05R680K			68μH	1	
			Filters				
FL3001		VLF0196				1	
FL3002		VLF0195				1	
FL3003		VLF0197				1	
FL3004		VLF0188				1	
			Delay Lines				
DL3001		EFDKL645A13A				1	

Ref. No.	Part No.	Part Name & Description	Pcs / Set	Remarks
		Audio Section		
		Integrated Circuits		
IC4001	VEFA001	FIC A-1	1	
IC4002	VEFA003	FIC A-3	1	
		Transistor		
Q4001	2SD636		1	(Q,R,S)
		Resistors		
R4001	ERDS2TJ472	1/4W 4.7K	1	
R4002	ERDS2TJ010	1/4W 100	1	
R4003	ERDS2TJ5R6	1/4W 5.6	1	
R4004	ERDS2TJ221	1/4W 220	1	
R4005	ERDS2TJ183	1/4W 18K	1	
R4006	ERDS2TJ223	1/4W 22K	1	
R4007	ERDS2TJ101	1/4W 100	1	
R4008	ERDS2TJ151	1/4W 150	1	
R4009		Variable 50K	1	
R4010	EVN3ACA00B15	Variable 100K	1	
R4011	ERDS2TJ333	1/4W 33K	1	
R4012	ERDS2TJ681	1/4W 680	1	
R4013	ERDS2TJ103	1/4W 10K	1	
R4014	ERDS2TJ391	1/4W 390	1	
R4015	ERDS2TJ473	1/4W 47K	1	
		Capacitors		
C4001	ECKF1H103ZF	Ceramic 50V 0.01	1	
C4002	ECEA1EK3R3	Electrolytic 25V 3.3	1	
C4003	ECEA1AK330	Electrolytic 10V 33	1	
C4004	ECEA1HK2R2	Electrolytic 50V 2.2	1	
C4005	ECQV05474JZ	Mylar 50V 0.47	1	
C4006	ECEA1AK330	Electrolytic 10V 33	1	
C4007	ECEA1HK010	Electrolytic 50V 1	1	
C4008	ECEA0JK220	Electrolytic 6.3V 22	1	
C4010	ECQP1152JZ	Mylar 100V0.0015	1	
C4011	ECWM1H153KZ3	Mylar 50V 0.015	1	
C4012	ECKZ1H472ZF	Ceramic 50V 4700P	1	
C4013,4014	ECEA1CK100	Electrolytic 16V 10	2	
C4015	ECEA0JK101	Electrolytic 6.3V 100	1	
C4016	ECEA1CK100	Electrolytic 16V 10	1	
C4017	ECEA0JK470	Electrolytic 6.3V 47	1	
C4018	ECQV05184JZ	Mylar 50V 0.18	1	
C4019	ECWM1H153JZ	Mylar 50V 0.015	1	
C4020	ECWM1H473KZ	Mylar 50V 0.047	1	
C4022	ECEA1CK100	Electrolytic 16V 10	1	
C4023	ECEA0JK470	Electrolytic 6.3V 47	1	
C4024	ECEA1EK3R3	Electrolytic 25V 3.3	1	
C4025	ECEA1ASS101	Electrolytic 10V 100	1	
C4027	ECEA0CK100	Electrolytic 6.3V 10	1	
C4028	ECCF1H391	Ceramic 50V 390P	1	
C4029	ECKF1H102KB	Ceramic 50V 1000P	1	
		Coils		
L4001-4004	VLQEL06F471K	470μH	1	
		Transformers		
T4001	ELM7Q207E		1	
T4002	VLQ0096		1	

Ref. No.	Part No.	Part Name & Description	Pcs / Set	Remarks
		Loading Motor Drive Section		
		Integrated Circuit		
IC6401	VCR0045		1	
		Transistors		
Q6401	2SB772		1	(P,Q)
Q6402	2SB819		1	(Q,R)
Q6403,6404	2SD892		2	(Q,R)
Q6405,6406	2SD636		2	(Q,R,S)
Q6407	2SB774		1	(Q,R,S)
		Diodes		
D6401	RD11JB	Zener	1	
D6402-6405	MA165		4	
D6406	11DQ04FE7		1	
D6407-6411	MA165		5	
		Resistors		
R6401	ERDS2TJ102	1/4W 1K	1	
R6402	ERX12ANJR51	Metal 1/2W 0.51	1	
R6403	ERDS2TJ220	1/4W 22	1	
R6404	ERDS2TJ823	1/4W 82K	1	
R6405	ERDS2TJ102	1/4W 1K	1	
R6406	ERDS2TJ221	1/4W 220	1	
R6407	ERDS2TJ683	1/4W 68K	1	
R6408,6409	ERDS2TJ223	1/4W 22K	2	
R6410	ERDS2TJ562	1/4W 5.6K	1	
R6411	ERDS2TJ563	1/4W 56K	1	
R6412	ERDS2TJ333	1/4W 33K	1	
R6413,6414	ERDS2TJ563	1/4W 56K	2	
R6415,6416	ERDS2TJ683	1/4W 68K	2	
R6417	ERDS2TJ103	1/4W 10K	1	
R6418	ERDS2TJ473	1/4W 47K	1	
R6419,6420	ERDS2TJ333	1/4W 33K	2	
R6421	ERDS2TJ102	1/4W 1K	1	
		Capacitors		
C6401	ECEA1CK220	Electrolytic 16V 22	1	
C6402	ECEA1HK010	Electrolytic 50V 1	1	
C6403	ECEA1CK330	Electrolytic 16V 33	1	
C6404	ECEA1HK010	Electrolytic 50V 1	1	
C6405	ECKF1H103ZF	Ceramic 50V 0.01	1	
		Relay		
RY6401	VSY1016		1	

Ref. No.		Part No.	Part Name & Description	Pcs / Set	Remarks
			Jack Panel Section		
			Integrated Circuit		
IC6501		VCR0056		1	
			Transistors		
Q6501		2SD636		1	(Q,R,S)
Q6502		2SB641		1	(Q,R)
Q6503		2SD636		1	(Q,R,S)
Q6504		2SB641		1	(Q,R)
Q6505,6506		2SD636		2	(Q,R,S)
Q6507		2SB641		1	(Q,R)
Q6508		2SD636		1	(Q,R,S)
Q6509		2SB641		1	(Q,R)
			Diodes		
D6501-6507		MA165		7	
D6508		ERC0402E3		1	
D6509		ERC81004H		1	
D6510,6511		MA165		2	
			Resistors		
R6501		ERDS2TJ750	1/4W 75	1	
R6502		ERDS2TJ680	1/4W 68	1	
R6503		ERDS2TJ104	1/4W 100K	1	
R6505		ERDS2TJ223	1/4W 22K	1	
R6506		ERDS2TJ471	1/4W 470	1	
R6507		ERDS2TJ681	1/4W 680	1	or ERDS2TJ103 1/4W 10K
R6508		ERDS2TJ750	1/4W 75	1	
R6509		ERDS2TJ563	1/4W 56K	1	
R6510		ERDS2TJ102	1/4W 1K	1	
R6511		ERDS2TJ182	1/4W 1.8K	1	
R6512		ERDS2TJ102	1/4W 1K	1	
R6513		ERDS2TJ222	1/4W 2.2K	1	
R6514		ERDS2TJ563	1/4W 56K	1	
R6515		ERDS2TJ102	1/4W 1K	1	
R6516		ERDS2TJ272	1/4W 2.7K	1	
R6517		ERDS2TJ102	1/4W 1K	1	
R6518		ERDS2TJ224	1/4W 220K	1	
R6519		ERDS2TJ474	1/4W 470K	1	
R6520		ERDS2TJ682	1/4W 6.8K	1	
R6521		ERDS2TJ153	1/4W 15K	1	
R6522-6524		ERDS2TJ104	1/4W 100K	3	
R6525,6526		EVJ5LA007B15	Variable 100K	2	
R6527		ERDS2TJ103	1/4W 10K	1	
R6528		ERDS2TJ104	1/4W 100K	1	
R6529		ERDS2TJ102	1/4W 1K	1	
R6530		ERDS2TJ104	1/4W 100K	1	
R6531		ERDS2TJ102	1/4W 1K	1	
R6532		ERDS2TJ331	1/4W 330	1	
R6533		ERDS2TJ222	1/4W 2.2K	1	
			Capacitors		
C6501,6502		ECEA1AK330	Electrolytic 10V 33	2	
C6503,6504		ECCZ1H121K	Ceramic 50V 120P	2	
C6505		ECEA1EK4R7	Electrolytic 25V 4.7	1	
C6506		ECEA1HKR33	Electrolytic 50V 0.33	1	
C6507		ECEA1HK010	Electrolytic 50V 1	1	
C6508		ECEA1HKN010	Electrolytic 50V 1	1	
C6509		ECKZ1H331KB	Ceramic 50V 330P	1	
C6510		ECSF35ER33	Tantalum 35V 0.33	1	

Ref. No.		Part No.	Part Name & Description	Pcs / Set	Remarks
C6511		ECEA1VK4R7	Electrolytic 35V 4.7	1	
C6512		ECEA1EK220	Electrolytic 25V 22	1	
C6513,6514		ECEA1HK010	Electrolytic 50V 1	2	
			Relay		
RY6501		VSY2028		1	
			Fuse		
F6501		XBA2C20TR0		1	⚠
		VGT0273	Tracking VR Knob	1	
			Chrominance Section		
			Integrated Circuits		
IC8001		VEFC003	FIC C-3	1	
IC8002		VEFC004	FIC C-4	1	
IC8003		VEFC005	FIC C-5	1	NV-100EG
			Transistors		
Q8001		2SD636		1	(Q,R,S)
Q8002		2SC2206		1	(B,C)
Q8003		2SD636		1	(Q,R,S)
Q8004		2SD636		1	(Q,R,S) NV-100EG
			Diode		
D8001		MA165		1	NV-100EG
			Resistors		
R8001		ERDS2TJ102	1/4W 1K	1	
R8002-8004		ERDS2TJ221	1/4W 220	3	
R8005		ERDS2TJ181	1/4W 180	1	
R8006		ERDS2TJ151	1/4W 150	1	
R8007		ERDS2TJ121	1/4W 120	1	
R8008		ERDS2TJ101	1/4W 100	1	
R8009		ERDS2TJ271	1/4W 270	1	NV-100EG
R8010		ERDS2TJ102	1/4W 1K	1	
R8011		ERDS2TJ102	1/4W 1K	1	
R8012		ERDS2TJ154	1/4W 150K	1	
R8013		ERDS2TJ681	1/4W 680	1	
R8014		ERDS2TJ152	1/4W 1.5K	1	
R8015		EVN3ACA00B23	Variable 2K	1	
R8016		ERDS2TJ331	1/4W 330	1	
R8017,8018		ERDS2TJ393	1/4W 39K	2	
R8019		ERDS2TJ471	1/4W 470	1	
R8020		ERDS2TJ222	1/4W 2.2K	1	NV-100EG

Ref. No.		Part No.	Part Name & Description	Pcs / Set	Remarks
R8021		ERDS2TJ271	1/4W 270	1	
R8022		EVN3ACA00B52	Variable 500	1	
R8023		ERDS2TJ271	1/4W 270	1	
R8024		ERDS2TJ222	1/4W 2.2K	1	
R8025		ERDS2TJ273	1/4W 27K	1	
R8026		ERDS2TJ123	1/4W 12K	1	
R8027		ERDS2TJ102	1/4W 1K	1	
R8028		ERDS2TJ391	1/4W 390	1	
R8029		ERDS2TJ562	1/4W 5.6K	1	
R8030		ERDS2TJ223	1/4W 22K	1	
R8031		ERDS2TJ124	1/4W 120K	1	
R8032		ERDS2TJ683	1/4W 68K	1	NV-100EG
R8033		ERDS2TJ102	1/4W 1K	1	NV-100EG
			Capacitors		
C8001		VCYD1C104MX	Semiconductor 16V 0.1	1	NV-100EG
C8002		ECEA0JK470	Electrolytic 6.3V 47	1	
C8003		ECEA1AK330	Electrolytic 10V 33	1	
C8004		ECCZ1H390K	Ceramic 50V 39P	1	
C8005		ECEA1AK330	Electrolytic 10V 33	1	
C8006		ECCF1H030DC	Ceramic 50V 3P	1	
C8007		ECV1ZW40X53N	Trimmer 500V 40P	1	
C8008		ECCF1H010CC	Ceramic 50V 1P	1	
C8009		ECEA1CK100	Electrolytic 16V 10	1	
C8010		ECWM1H682KZ	Mylar 50V 0.0068	1	
C8011		ECKF1H103ZF	Ceramic 50V 0.01	1	
C8012		ECEA1HK010	Electrolytic 50V 1	1	
C8013		ECEA1CK100	Electrolytic 16V 10	1	
C8014		ECKF1H103ZF	Ceramic 50V 0.01	1	
C8015		ECCZ1H390K	Ceramic 50V 39P	1	
C8016		ECEA1HK2R2	Electrolytic 50V 2.2	1	
C8017		ECEA1CK100	Electrolytic 16V 10	1	
C8019,8020		ECEA1AK330	Electrolytic 10V 33	2	
C8021		ECEA1HK010	Electrolytic 50V 1	1	
C8022		ECEA1HK0R1	Electrolytic 50V 0.1	1	
C8023		ECKF1H103ZF	Ceramic 50V 0.01	1	
C8024		ECCZ1H101K	Ceramic 50V 100P	1	
C8025		ECEA1CKS100	Electrolytic 16V 10	1	
C8026		ECCF1H221K	Ceramic 50V 220P	1	NV-100EG
C8027		ECEA1CKS100	Electrolytic 16V 10	1	NV-100EG
C8028		ECEA1AK330	Electrolytic 10V 33	1	NV-100EG
C8029		ECEA1HKN010	Electrolytic 50V 1	1	NV-100EG
C8030		ECWM1H563JZ	Mylar 50V 0.056	1	NV-100EG
C8031		ECCF1H680K	Ceramic 50V 68P	1	NV-100EG
C8033		ECKF1H103ZF	Ceramic 50V 0.01	1	
			Coils		
L8002		VLQEL05R390K	39μH	1	
L8003		VLQEL05R560K	56μH	1	
L8004		VLQEL06R102K	1mH	1	
L8005		VLQEL05R330K	33μH	1	
L8006		VLQEL05R390K	39μH	1	
L8007		VLQEL06L682J	6.8mH	1	
L8008		VLQEL05R680K	68μH	1	
L8009		ELM7Q207A		1	NV-100EG
L8010		VLQEL5R101	100μ	1	NV-100EG
			Filters		
FL8001		VLF0198		1	
FL8002		VLF0199		1	
FL8003		EFCS5R06MS4W		1	
FL8004		VLF0143		1	NV-100EG

Ref. No.		Part No.	Part Name & Description	Pcs / Set	Remarks
			Delay Line		
DL8001		EFDWT124A13A		1	
			Crystal		
X8001		VSX0068		1	
			Connectors		
P1		VJP1242T	2P	1	
P2		VJP1239T	12P	1	
P3		VJP1233T	6P	1	
P4,5		VJP1237T	10P	2	
P6		VJP1232T	5P	1	
P7		VJP1229G	2P	1	
P8		VJP1229T	2P	1	
P9		VJP1233T	6P	1	
P10		VJP1232T	5P	1	
P11		VJP1229B	2P	1	
P12		VJP1230T	3P	1	
P13		VJP1229T	2P	1	
P14		VJP1237T	10P	1	
P15		VJP1235T	8P	1	
P16		VJP1229B	2P	1	
P27		VJP1229T	2P	1	
P45		VJP1230T	3P	1	
			Miscellaneous		
		TJC6320	Fuse Holder	4	
		ECCF1H101KC	Ceramic Capacitors 50V 100P	1	
		ERDS2TJ222	Resistor 1/4W 2200	1	
		VEP02148B	Cylinder Drive P.C.B. Unit		
			Integrated Circuit		
IC2501		AN6387		1	
			Transistors		
Q2501-2503		2SD636		3	(Q,R,S)
			Diodes		
D2501-2504		MA165		4	
			Resistors		
R2501		ERDS2TJ124	1/4W 120K	1	
R2502		ERX12ANJR56	Metal 1/2W 0.56	1	
R2503		ERDS2TJ104	1/4W 100K	1	
R2504		EROS2TKG3902	Metal 1/4W 39K	1	
R2505		EROS2TKG1502	Metal 1/4W 15K	1	
R2506-2508		ERDS2TJ470	1/4W 47	3	
R2509		ERDS2TJ105	1/4W 1M	1	
R2510		ERDS2TJ223	1/4W 22K	1	
R2511		ERDS2TJ683	1/4W 68K	1	
R2512		ERDS2TJ682	1/4W 6800	1	
R2513		ERDS2TJ472	1/4W 4700	1	
R2514		ERDS2TJ274	1/4W 270K	1	
R2515		EVN3ACA00B15	Variable 100K	1	
R2516		ERDS2TJ104	1/4W 100K	1	
R2517		ERDS2TJ153	1/4W 15K	1	
R2518		EROS2TKG3301	Metal 1/4W 39K	1	
R2519		EROS2TKG1201	Metal 1/4W 1200	1	
			Capacitors		
C2501		ECEA1CK470	Electrolytic 16V 47	1	
C2502		ECWM1H123KZ	Mylar 50V 0.012	1	

Ref. No.	Part No.	Part Name & Description	Pcs / Set	Remarks
C2503	ECKF1H472ZF	Ceramic 50V 4700P	1	
C2504	ECWM1H682KZ	Mylar 50V 6800P	1	
C2505	ECEA1EK3R3	Electrolytic 25V 3.3	1	
C2506	ECSF16ER22K	Tantalum 16V 0.22	1	
C2507	ECKF1H102KB	Ceramic 50V 1000P	1	
C2508	ECEA1CK470	Electrolytic 16V 47	1	
C2509-2511	ECEA1EKN2R2	Electrolytic 25V 2.2	3	
C2512	ECSF16ER15K	Tantalum 16V 0.15	1	
C2513	ECKF1H102KB	Ceramic 50V 1000P	1	
C2514	ECEA1AK330	Electrolytic 10V 33	1	
		Miscellaneous		
P15	VJP1235	Connector 8P	1	
TP2501	VJH0196	Check Terminal	2	
GND				
	VEK1475	Capstan Drive P.C. Board		
		Unit		
		Integrated Circuits		
IC2701	AN6676		1	
IC2702	VEFS001	FIC S-1	1	
		Transistors		
Q2701-2703	2SB819		3	(P,Q,R)
		Resistors		
R2701-2703	ERD2FCG220	22	3	
R2704	ERX12ANJR56	Metal Oxide 1/2W 0.56	1	
R2705	ERD10TJ392	3.9K	1	
		Capacitors		
C2701-2703	ECEA1HK2R2	Electrolytic 50V 2.2	3	
C2704	ECEA1HK0R1	Electrolytic 50V 0.1	1	
C2705,2706	ECEA1CK220	Electrolytic 16V 22	2	
		Connector		
P31	VJP1237T	10P	1	
		Spacer		
	VMX0424		1	

Ref. No.	Part No.	Part Name & Description	Pcs / Set	Remarks
	VEP06164A	System Control P.C.Board		
		Unit		
		Integrated Circuits		
IC6001	μPD7502G090		1	
IC6002	MN1455AVA		1	
IC6003	MN1455AVB		1	
IC6004,6005	μPD4503BC		2	
IC6006	μPC393C		1	
		Transistors		
Q6001-6008	2SB641		8	(Q,R,S)
Q6009,6010	2SD636		2	(Q,R,S)
Q6012	2SD636		1	(Q,R,S)
Q6013,6014	2SB641		2	(Q,R,S)
Q6015,6016	2SD636		2	(Q,R,S)
Q6017	2SB641		1	(Q,R,S)
Q6018	2SD636		1	(Q,R,S)
Q6019	2SD992		1	(K,L)
Q6010-6022	2SD636		3	(Q,R,S)
Q6023	2SB641		1	(Q,R,S)
Q6024	2SC2594		1	
Q6025,6026	2SD636		2	(Q,R,S)
Q6027	2SB641		1	(Q,R,S)
Q6028	2SD636		1	(Q,R,S)
Q6029	2SB641		1	(Q,R,S)
Q6030	2SD638		1	(Q,R,S)
Q6031-6035	2SB641		5	(Q,R,S)
Q6036,6037	2SD636		2	(Q,R,S)
Q6039,6040	2SD636		2	(Q,R,S)
Q6041	2SC2603		1	(EZ,F)
		Diodes		
D6001-6007	BR3902S	LED	7	
D6008	MA27W		1	
D6009-6022	MA165		14	
D6023	10E1		1	
D6024-6030	MA165		7	
D6032-6034	MA165		3	
D6036,6037	MA165		2	
D6038	MA27W		1	
D6039	MA165		1	
		Resistors		
R6001	ERDS2TJ561	1/4W 560	1	
R6002-6005	ERDS2TJ223	1/4W 22K	4	
R6006	ERDS2TJ821	1/4W 820	1	
R6007,6008	ERDS2TJ223	1/4W 22K	2	
R6009	ERDS2TJ103	1/4W 10K	1	
R6010,6011	ERDS2TJ223	1/4W 22K	2	
R6012	ERDS2TJ562	1/4W 5.6K	1	
R6013	ERDS2TJ223	1/4W 22K	1	
R6014	ERDS2TJ561	1/4W 560	1	
R6015	ERDS2TJ223	1/4W 22K	1	
R6016,6017	ERDS2TJ563	1/4W 56K	2	
R6018	ERDS2TJ223	1/4W 22K	1	
R6019	ERDS2TJ473	1/4W 47K	1	
R6020	ERDS2TJ223	1/4W 22K	1	
R6021	ERDS2TJ104	1/4W 100K	1	
R6022	ERDS2TJ331	1/4W 330	1	
R6023-6025	ERDS2TJ563	1/4W 56K	3	
R6026	ERDS2TJ123	1/4W 12K	1	
R6027-6029	ERDS2TJ104	1/4W 100K	3	
R6030	ERDS2TJ153	1/4W 15K	1	
R6032	ERDS2TJ331	1/4W 330	1	
R6033,6034	ERDS2TJ562	1/4W 5.6K	2	

Ref. No.		Part No.	Part Name & Description	Pcs / Set	Remarks
R6037-6039		EROS2TLG1003	Metal 100K	3	
R6040		EROS2TKG2003	Metal 200K	1	
R6041		ERDS2TJ123	1/4W 12K	1	
R6042		ERDS2TJ222	1/4W 2.2K	1	
R6043-6045		ERDS2TJ223	1/4W 22K	3	
R6046		ERDS2TJ683	1/4W 68K	1	
R6047		ERDS2TJ153	1/4W 15K	1	
R6048		ERDS2TJ103	1/4W 10K	1	
R6049		ERDS2TJ682	1/4W 6.8K	1	
R6050		ERDS2TJ223	1/4W 22K	1	
R6051,6052		ERDS2TJ103	1/4W 10K	2	
R6053		ERDS2TJ105	1/4W 1M	1	
R6054		ERDS2TJ104	1/4W 100K	1	
R6055		ERDS2TJ332	1/4W 3.3K	1	
R6056		ERDS2TJ271	1/4W 270	1	
R6057		ERDS2TJ223	1/4W 22K	1	
R6058		ERDS2TJ823	1/4W 82K	1	
R6059		ERDS2TJ223	1/4W 22K	1	
R6060		ERDS2TJ124	1/4W 120K	1	
R6061		ERDS2TJ223	1/4W 22K	1	
R6062		ERDS2TJ823	1/4W 82K	1	
R6063		ERDS2TJ223	1/4W 22K	1	
R6064		ERDS2TJ682	1/4W 6.8K	1	
R6065		ERDS2TJ563	1/4W 56K	1	
R6066,6067		ERDS2TJ103	1/4W 10K	2	
R6068		ERDS2TJ221	1/4W 220	1	
R6069		ERDS2TJ103	1/4W 10K	1	
R6070-6072		ERDS2TJ104	1/4W 100K	3	
R6073		ERDS2TJ224	1/4W 220K	1	
R6074		ERDS2TJ104	1/4W 100K	1	
R6075		ERDS2TJ103	1/4W 10K	1	
R6076		ERDS2TJ223	1/4W 22K	1	
R6077,6078		ERDS2TJ563	1/4W 56K	2	
R6079		ERDS2TJ103	1/4W 10K	1	
R6080		ERDS2TJ333	1/4W 33K	1	
R6081		ERDS2TJ561	1/4W 560	1	
R6082,6083		ERDS2TJ563	1/4W 56K	2	
R6084		ERDS2TJ103	1/4W 100K	1	
R6085		ERDS2TJ333	1/4W 33K	1	
R6086		ERD25TJ560	1/4W 56	1	
R6087		ERDS2TJ273	1/4W 27K	1	
R6088		EVN3ACA00B14	Variable 10K	1	
R6089		ERDS2TJ563	1/4W 56K	1	
R6090,6091		ERDS2TJ223	1/4W 22K	2	
R6092		ERDS2TJ104	1/4W 100K	1	
R6093		EROS2TKG1803	Metal 180K	1	
R6094		ERO25CKF4703	Metal 470K	1	
R6095		ERDS2TJ564	1/4W 560K	1	
R6096		ERDS2TJ223	1/4W 22K	1	
R6097		ERDS2TJ334	1/4W 330K	1	
R6098		ERDS2TJ123	1/4W 12K	1	
R6099		ERDS2TJ104	1/4W 100K	1	
R6100		ERDS2TJ103	1/4W 10K	1	
R6101,6102		ERDS2TJ223	1/4W 22K	2	
R6103		ERDS2TJ103	1/4W 10K	1	
R6104,6105		ERDS2TJ223	1/4W 22K	2	
R6106,6107		ERDS2TJ104	1/4W 100K	2	
R6108		ERDS2TJ472	1/4W 4.7K	1	
R6109-6111		ERDS2TJ103	1/4W 10K	3	
R6112-6115		ERDS2TJ223	1/4W 22K	4	
R6116		ERDS2TJ103	1/4W 10K	1	
R6119-6124		ERDS2TJ223	1/4W 22K	6	
R6125		ERDS2TJ103	1/4W 10K	1	
R6126		ERDS2TJ104	1/4W 100K	1	
R6127		ERDS2TJ102	1/4W 1K	1	
R6128		ERDS2TJ153	1/4W 15K	1	
R6129,6130		ERDS2TJ104	1/4W 100K	2	
R6131		ERDS2TJ562	1/4W 5.6K	1	
R6132		ERDS2TJ104	1/4W 100K	1	
R6133		ERDS2TJ223	1/4W 22K	1	

Ref. No.		Part No.	Part Name & Description	Pcs / Set	Remarks
R6134,6135		ERDS2TJ563	1/4W 56K	2	
R6136		ERDS2TJ103	1/4W 10K	1	
R6139,6140		ERDS2TJ563	1/4W 56K	2	
R6141		ERDS2TJ390	1/4W 39	1	
R6142		ERDS2TJ563	1/4W 56K	1	
R6143		ERDS2TJ124	1/4W 120K	1	
			Capacitors		
C6001		ECEA1HKL010	Electrolytic 50V 1	1	
C6002,6003		ECKZ1H221KB	Ceramic 50V 220P	2	
C6004-6006		ECKZ1H102KB	Ceramic 50V 1000P	3	
C6007		ECKF1H103ZF	Ceramic 50V 0.01	1	
C6008		ECEA1HKL010	Electrolytic 50V 1	1	
C6011		ECKF1H103ZF	Ceramic 50V 0.01	1	
C6012,6013		ECKZ1H561KB	Ceramic 50V 560P	2	
C6014		ECKF1H103ZF	Ceramic 50V 0.01	1	
C6015		ECEA0JK470	Electrolytic 6.3V 47	1	
C6016		ECEA1HKL010	Electrolytic 50V 1	1	
C6017		ECEA1EKL4R7	Electrolytic 25V 4.7	1	
C6018		ECKF1H472KB	Ceramic 50V 4700P	1	
C6019		ECKF1H222KB	Ceramic 50V 2200P	1	
C6020		ECKF1H103ZF	Ceramic 50V 0.01	1	
C6021		ECEA0JK220	Electrolytic 6.3V 22	1	
C6022		ECKF1H103ZF	Ceramic 50V 0.01	1	
C6023		ECWM1H473KZ	Ceramic 50V 0.047	1	
C6024		ECQV050104JB	Mylar 50V 0.1	1	
			Switches		
SW6001,6002		EVQQS107K		2	
SW6003		EVQQS107KA		1	
SW6004-6006		EVQQS107K		3	
SW6007-6009		EVQQS107KA		3	
SW1010,6011		EVQQS107K		2	
SW6012		ESD14184		1	
SW6014		EMR2511		1	
			Connectors		
JA-JD		VJP1235T	8P	4	
P6020		VJP1230T	3P	1	
P6021		VJP1231T	4P	1	
P6022		VJP1237T	10P	1	
P6023,6024		VJP1233T	6P	2	
P6025		VJP1237T	10P	1	

Ref. No.		Part No.	Part Name & Description	Pcs / Set	Remarks
		VEP06165B	Back-up P.C. Board Unit		
			Resistor		
R6552		ERX12ANJ3R9	Metal Oxide 1/2W 3.9	1	
			Capacitors		
C6551		ECEA1CV682	Electrolytic 16V 6800	1	
C6552-6554		EECW1R8A1	Gold Capacitor 1.8V 1	3	
			Connectors		
P34		VJP1229T	2P	1	
P35		VJP1229G	2P	1	
P36		VJP1229B	2P	1	
P37		VJP1229R	2P	1	
P38		VJP1231B	4P	1	
			Full Erase P.C. Board		
			Transistor		
Q6553		2SD636		1	
			Resistor		
R6553		ERD10TJ333	33K	1	
			Capacitors		
C6555		ECWM1H153J	Mylar 50V 0.015	1	
C6556		ECKF1H472Z	Ceramic 50V 4700	1	
C6557		ECWM1H333J	Mylar 50V 0.033	1	
C6558		ECEA1CK220	Electrolytic 16V 22	1	
			Transformer		
T6551		ELM7Q011E	Oscillator	1	
			Connector		
P23		VJP1229	2P	1	

Ref. No.		Part No.	Part Name & Description	Pcs / Set	Remarks
			Supply Reel Detector P.C. Board		
			Integrated Circuit		
		ON2160	Photo Interruptor	1	
		VJP1244G	4P Connector	1	
			Miscellaneous		
		VMX0380	Spacer	1	
			Take-up Reel Detector P.C. Board		
			Integrated Circuit		
		ON2160	Photo Interruptor	1	
		VJP1244G	4P Connector	1	
			Miscellaneous		
		VMX0380	Spacer	1	

Ref. No.		Part No.	Part Name & Description	Pcs / Set	Remarks
			Safety Tab SW P.C. Board		
		VSH0017	Safety Tab SW	1	
		VJP1229T	2P Connector	1	
			Supply Photo TR P.C. Board		
		PN150NV	Photo Transistor	1	
		MA165	Diode	2	
			Capacitor		
		ECEA1CK100	Electrolytic 16V 10	2	
		VJP1230R	3P Connector	1	
			Take-up Photo TR P.C. Board		
		PN150NV	Photo Transistor	1	

Ref. No.		Part No.	Part Name & Description	Pcs / Set	Remarks
		ENC17553	RF Converter		NV-100E/EG
			Integrated Circuits		
IC1		AN6395		1	
UO-1			UHF Oscillator	1	
			Transistors		
Q1,2		2SD636		2	
Q3,4		2SC1215		2	(R)
			Diodes		
D1		1S953		1	
D3		1SS86		1	
D4		MA1075	Zener	1	or RD7.5E
			Resistors		
R1		ERD10TJ333	33K	1	
R2		ERJ8GCJ103	Chip 10K	1	
R3		ERJ8GCJ331	Chip 330	1	
R4		ERJ8GCJ474	Chip 470K	1	
R5		ERJ8GCJ392	Chip 3.9K	1	
R6		ERJ8GCJ182	Chip 1.8K	1	
R7		ERJ8GCJ122	Chip 1.2K	1	
R8		ERJ8GCJ821	Chip 820	1	
R9		ERJ8GCJ562	Chip 5.6K	1	
R10		ERJ8GCJ151	Chip 150	1	
R11		ERD10TJ472	4.7K	1	
R12,13		ERJ8GCJ101	Chip 100	2	
R15		ERJ8GCJ270	Chip 27	1	
R16		ERD10TJ751	750	1	
R17		ERJ8GCJ121	Chip 120	1	
R18		ERD10TJ393	39K	1	
R19		ERD25FJ470	1/4W 47	1	
R20,21		ERD10TJ822	8.2K	2	(UO-1)
R22		ERD10TJ391	390	1	(UO-1)
VR1		EVX138CA00B13	Variable 1K	1	
VR2		EVX138CA00B14	Variable 10K	1	
			Capacitors		
C1		ECEA1AK330	Electrolytic 10V 33	1	
C2		ECEA1HK3R3	Electrolytic 50V 3.3	1	
C3		ECCF1H101KZ	Ceramic 50V 100P	1	
C4		CP2040CC	Chip 4P	1	
C5		CP2222MD	Chip 2200P	1	
C6		CP2150CC	Chip 15P	1	
C7		ECCF1H820KZ	Ceramic 82P	1	
C8		CP2050CC	Chip 5P	1	
C9		CT1152ZX	Semiconductor 1500P	1	
C10		ECEA1EK4R7	Electrolytic 25V 4.7	1	
C11		CP2103MD	Chip 0.01	1	
C12		CP2150J	Chip 15P	1	
C13		CP2680J	Chip 68P	1	
C14		CP2151J	Chip 150P	1	
C15		CP2390J	Chip 39P	1	
C16			Chip 27P	1	
C17		ECV1ZW25X53N	Trimmer 25P	1	
C18,19		CP2181J	Chip 180P	2	
C20		CY2102PE	1000P	1	(UO-1)
C21		CX2331KB	330P	1	(UO-1)
C22		CX2140K	14P	1	(UO-1)
C23		CX2040C	4P	1	(UO-1)

Ref. No.		Part No.	Part Name & Description	Pcs / Set	Remarks
C24			Variable 7P	1	(UO-1) (Not Available)
C25		CP2070J	Chip 7P	1	
C26		CP2103MD	Chip 0.01	1	
C27		ECEA1CK470	Electrolytic 16V 47	1	
C28		CP2103MD	Chip 0.01	1	
C29		CP2102MD	Chip 1000P	1	
C30		ECCF1H010CC	Ceramic 50V 1P	1	
C31		CP2102MD	Chip 1000P	1	
C32		ECCF1H040CC	Ceramic 50V 4P	1	
C33		CU2DR2QA-S	0.2P	1	(UO-1)
			Coiles		
L1		LP403804	Coreless	1	
L2		FL3H8R2K	Peaking 8.2μH	1	
L3		LB1626092A02	Choke	1	
L4		LN07W350VL01		1	(UO-1)
L5		VN08W200L6		1	(UO-1)
L6		LB162609VU03	Choke	1	(UO-1)
			Tanses		
T1		VLT0327	SIF Oscillator	1	
T2		BRNA010V		1	
			Connectors		
P1		VJP1143	5P	1	
PJ		PNJA002E	Pin Jack	1	
		ENC17554	RF Converter		NV-100B
			Integrated Circuits		
IC1		AN6395		1	
UO-1			UHF Oscillator	1	
			Transistors		
Q1,2		2SD636		2	
Q3,4		2SC1215		2	(R)
			Diodes		
D1		1S953		1	
D3		2SS86		1	
D4		MA1075	Zener	1	or RD7.5E
			Resistors		
R1		ERD10TJ333	33K	1	
R2		ERJ8GCJ103	Chip 10K	1	
R3		ERJ8GCJ331	Chip 330	1	
R4		ERJ8GCJ474	Chip 470K	1	
R5		ERJ8GCJ392	Chip 3.9K	1	
R6		ERJ8GCJ182	Chip 1.8K	1	
R7		ERJ8GCJ122	Chip 1.2K	1	
R8		ERJ8GCJ821	Chip 820	1	
R9		ERJ8GCJ562	Chip 5.6K	1	
R10		ERJ8GCJ151	Chip 150	1	
R11		ERD10TJ562	5.6K	1	

Ref. No.		Part No.	Part Name & Description	Pcs / Set	Remarks
R12,13		ERJ8GCJ101	Chip 100	2	
R15		ERJ8GCJ270	Chip 27	1	
R16		ERD10TJ751	750	1	
R17		ERJ8GCJ121	Chip 120	1	
R18		ERD10TJ393	39K	1	
R19		ERD25FJ470	1/4W 47	1	
R20,21		ERD10TJ822	8.2K	2	(UO-1)
R22		ERD10TJ391	390	1	(UO-1)
VR1		EVX138CA00B13	Variable 1K	1	
VR2		EVX138CA00B14	Variable 10K	1	
			Capacitors		
C1		ECEA1AK330	Electrolytic 10V 33	1	
C2		ECEA1HK3R3	Electrolytic 50V 3.3	1	
C3		ECCF1H101KZ	Ceramic 50V 100P	1	
C4		CP2040CC	Chip 4P	1	
C5		CP2222MD	Chip 2200P	1	
C6		CP2150CC	Chip 15P	1	
C7		ECCF1H820KZ	Ceramic 50V 82P	1	
C8		CP2050CC	Chip 5P	1	
C9		CT1152ZX	Semiconductor 1500P	1	
C10		ECEA1EK4R7	Electrolytic 25V 4.7	1	
C11		CP2103MD	Chip 0.01	1	
C12		CP2150J	Chip 15P	1	
C13		CP2680J	Chip 68P	1	
C14		CP2151J	Chip 150P	1	
C15		CP2390J	Chip 39P	1	
C16			Chip 27P	1	
C17		ECV1ZW25X53N	Trimmer 25P	1	
C18,19		CP2181J	Chip 180P	2	
C20		CY2102PE	1000P	1	(UO-1)
C21		CX2331KB	330P	1	(UO-1)
C22		CX2140K	14P	1	(UO-1)
C23		CX2040C	4P	1	(UO-1)
C24			Variable 7P	1	(UO-1) (Not Available)
C25		CP2070J	Chip 7P	1	
C26		CP2103MD	Chip 0.01	1	
C27		ECEA1CK470	Electrolytic 16V 47	1	
C28		CP2103MD	Chip 0.01	1	
C29		CP2102MD	Chip 1000P	1	
C30		ECCF1H010CC	Ceramic 50V 1P	1	
C31		CP2102MD	Chip 1000P	1	
C32		ECCF1H040CC	Ceramic 50V 4P	1	
C33		CU2DR2QA-S	0.2P	1	(UO-1)
			Coils		
L1		LP403804	Coreless	1	
L2		FL3H8R2K	Peaking 8.2μH	1	
L3		LB1626092A02	Choke	1	(UO-1)
L4		LN07W350VL01		1	(UO-1)
L5		LN08W200L6		1	(UO-1)
L6		LB162609VU03	Choke	1	
			Tanses		
T1		VLT0327	SIF Oscillaotr	1	
T2		BRNA010V		1	
			Connectors		
P1		VJP1143	5P	1	
PJ		PNJA002E	Pin Jack	1	

Panasonic

MATSUSHITA ELECTRIC

Printed in Japan

ORDER NO. VRD-8206-099

Service Manual

Electronic Tuner/Timer Unit

Vol. 5

Panasonic VHS

NV-V10 -E -B -EO

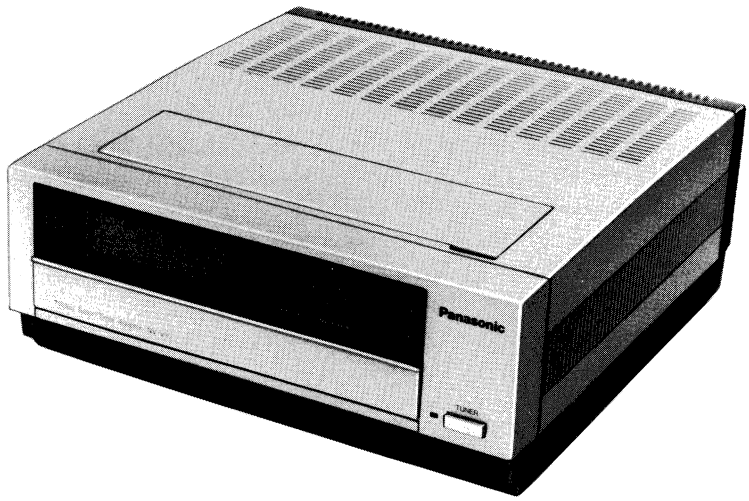

SPECIFICATIONS

Power Source:	NV-V100E, EO: 220 V NV-V10B: 240 V AC, 50/60 Hz
Power Consumption:	Approx. 43 watts
Television System:	CCIR: 625 lines, 50 fields PAL colour signal
Timer:	14 day/4-programme timer with 1-hour battery back-up system
Input:	NV-V10E VHF ch. 2—12. UHF ch. 21—69. NV-V10B UHF ch. 21—69. NV-V10EO VHF ch. E2—S3 (Low) M1—U9 (High) 75Ω unbalanced (DIN)
Output:	Video: (11P connector) 1.0 Vp-p, 75Ω unbalanced Audio: (11P connector) 130 mVp-p, 2.2 kΩ unbalanced
Weight:	3.4 kg
Dimensions:	232(W) × 95(H) × 261(D) mm

Weight and dimensions shown are approximate.
Specifications are subject to change without notice.

Panasonic

Matsushita Electric Trading Co., Ltd.
P.O. Box 288, Central Osaka Japan

CONTENTS

SPECIFICATIONS ..... Cover
OPERATING INSTRUCTIONS 5- 1
ELECTRICAL ADJUSTMENT PROCEDURES 5-10
LOCATION OF TEST POINT & CONTROLS 5-20
CIRCUIT BOARD LAYOUT 5-21
PROGRAMMABLE TIMER BLOCK DIAGRAM 5-22
POWER SUPPLY AND HIGH SPEED CHARGE BLOCK DIAGRAM 5-23
TV DEMODULATOR BLOCK DIAGRAM (NV-V10E/EO) 5-24
TV DEMODULATOR BLOCK DIAGRAM (NV-V10B) 5-24
PROGRAMMABLE TIMER CIRCUIT (NV-V10E/EO)
[Timer, Timer Display, Switch, Selector, Selector Sub, IR Receiver & Back Up] 5-25
PROGRAMMABLE TIMER CIRCUIT (NV-V10B)
[Timer, Timer Display, Switch, Selector, Selector Sub, IR Receiver & Back Up] 5-27
TV DEMODULATOR CIRCUIT (NV-V10E/EO)
[TV Demodulator, Power Supply Sub, Fuse,Antenna, & Booster] 5-29
TV DEMODULATOR CIRCUIT (NV-V10B)
[TV Demodulator, Power Supply Sub, Fuse, Antenna, & Booster] 5-31
EXPLODED VIEWS 5-33
MECHANICAL REPLACEMENT PARTS LIST 5-33
ELECTRICAL REPLACEMENT PARTS LIST 5-34

FEATURES

1. **16 station voltage synthesizer electronic tuner**
   The tuner is automatically tuned in to broadcasting station by using the search buttons.
2. **16 channel up-down selector channel indicator**
   When pressing the up or down button, you can easily find the desired channel.
3. **Recording TV programmes and unattended recording.**
   The built-in tuner of the unit enables you to record TV programmes with the NV-100 Portable Video Cassette Recorder. The built-in programmable timer permits unattended recording of up to 4 programmes. It can be preset 2 weeks in advance to record your favorite TV programmes. It turns the recorder on and off and changes channels automatically. All you have to do is to set the timer, the recording will start and stop on schedule no matter where you are.
4. **Recording while watching another programme.**
   The tuner permits you to record a programme on one channel while watching a different programme on TV.
5. **Battery back-up**
   In the event of a power failure for less than 1 hour the programmed timer memory will be retained.

IMPORTANT
"Unauthorized recording of copyrighted television programmes, films, video tapes and other materials may infringe on the rights of copyright owners and be contrary to copyright laws."

PRECAUTIONS

- Before trying to operate the unit, make sure that the Timer Rec Switch is OFF.
- Do not block or cover the ventilation slots on the top, rear, and bottom of the unit, especially by soft material such as cloth or paper.
- Use this unit horizontally and do not place anything heavy on the unit, e.g. Portable Video Cassette Recorder etc.
- Do not attempt to disassemble the tuner. There are no user serviceable parts inside.

CAUTION:
The NV-V10 is made for exclusively use with the NV-100 Portable Video Cassette Recorder.

WARNING:
TO PREVENT FIRE OR SHOCK HAZARD, DO NOT EXPOSE THIS EQUIPMENT TO RAIN OR MOISTURE.

INSTALLATION

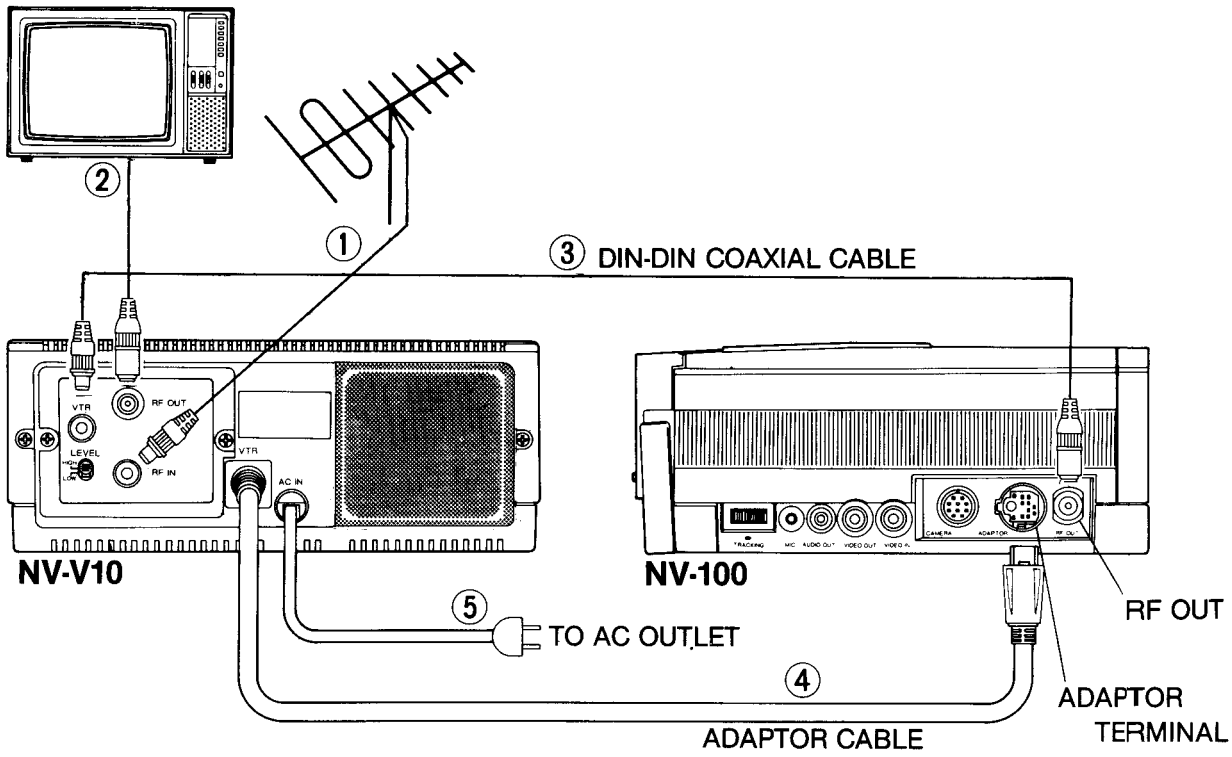

① Connect the external antenna to RF IN of the unit.
② Connect the TV to RF OUT of the unit.
③ The RF OUT of the recorder to VTR of the unit with the DIN-DIN Coaxial Cable supplied with the recorder.
④ Connect the Adaptor Cable to ADAPTOR TERMINAL of the recorder.
⑤ Plug in the unit.

Do not place the NV-100 portable video cassette recorder on top of the unit for use.

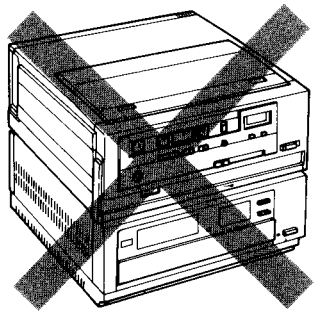

- Keep the unit away from the radio.

CONTROLS AND COMPONENTS

Top and FRONT

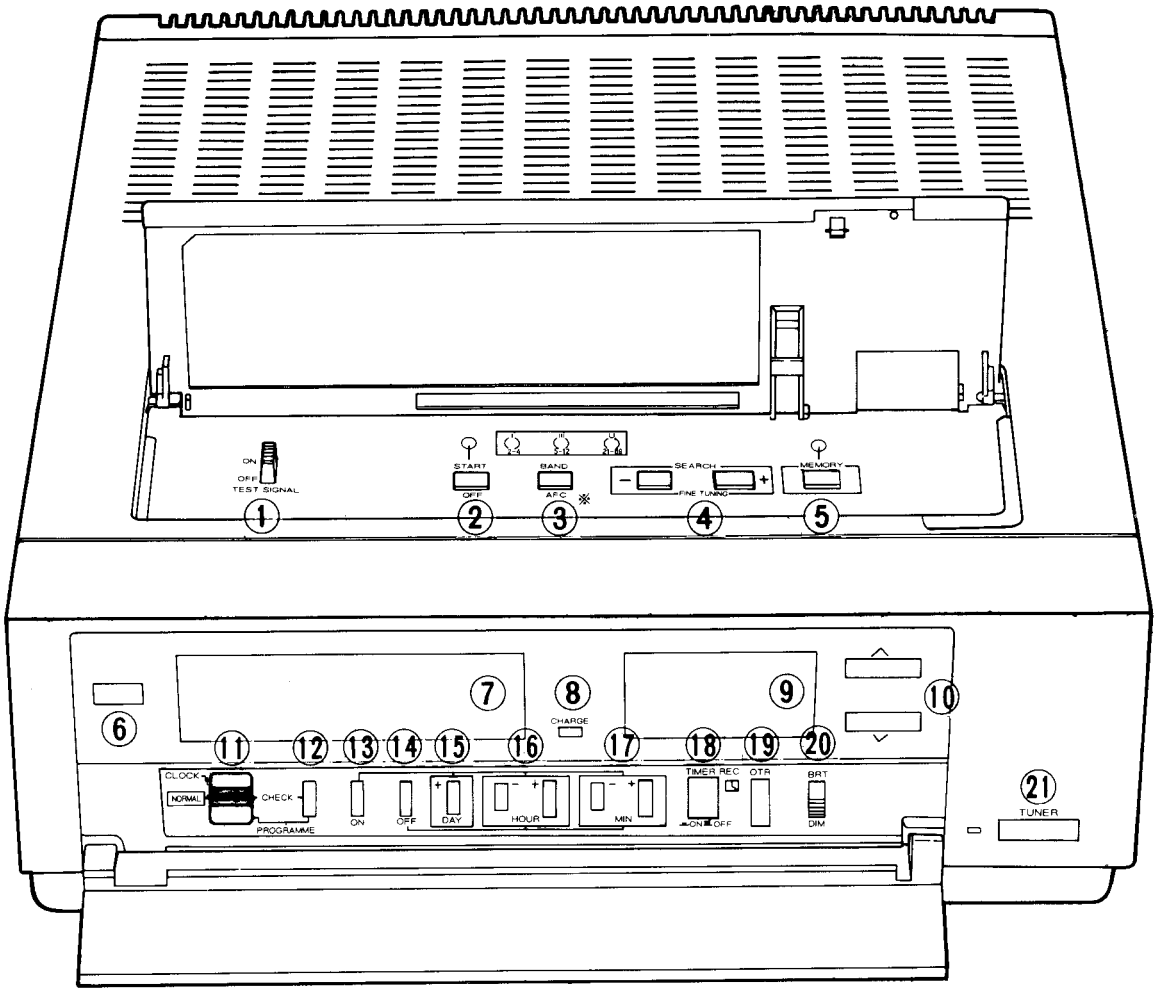

REAR

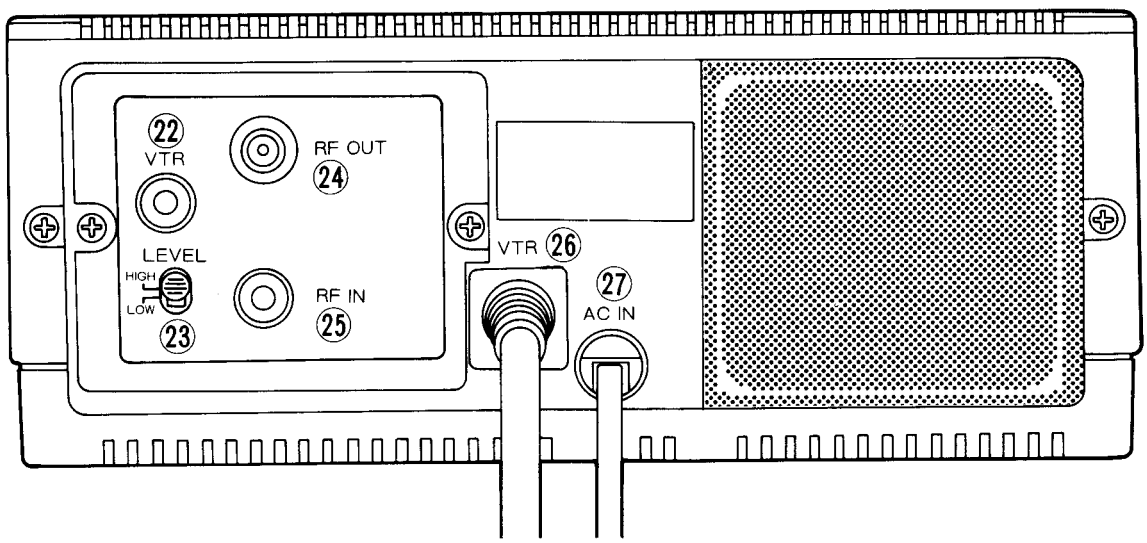

※ ③ The NV-V10-B (for the U.K.) does not come with a band button and band display lamps.

TOP and FRONT

① **Test Signal Switch [TEST SIGNAL]**
This switch should normally be set to "OFF". To adjust the playback image (RF output channel): To tune the VHS RF output channel on TV, move this switch to "ON".

② **Start Button [START]**
This button is for the function of the SEARCH/FINE TUNING.
ON..... for BAND, SEARCH operation
OFF..... for AFC, FINE Tuning operation
When the SEARCH is working, the Start Button Lamp is flashing.

③ **BAND/AFC Button [BAND/AFC]**
BAND..... for selecting the position of UHF, VHF (high or low).
AFC..... Locks onto signal to keep the picture clear at all times.
The NV-V10-B (for the U.K.) does not come with a band button and band display lamps.

④ **SEARCH/FINE TUNING Button [SEARCH/FINE TUNING]**
SEARCH..... for tuning in the tuner to the broadcasting station.
FINE TUNING..... for fine adjustment.

⑤ **Memory Button [MEMORY]**
This function memorizes the station selected by the Start Button operation.

⑥ **Remote Control Signal Receiver Window**
Receive the signal from the Wireless Remote Control. (NV-A17 optional).

⑦ **Programmable Clock/Timer**
This built-in programmable clock/timer constantly displays the time of day and is used for timer recording.

⑧ **Charging Indicator Lamp [CHARGE]**
Lights up while the battery pack of the recorder is being charged.
When charging has been completed, this lamp will go off. Charging will not occur during operation of the recorder therefore, this lamp will not light up when the recorder is ON.

⑨ **Channel, CH. Lock, AFC Indicator**
Indicates the CH. Lock, AFC, the channel number.
The CH. Lock is displayed on the channel display pannel when the recording or OTR is working.
The AFC is displayed on the channel display pannel when the AFC is working.

⑩ **Channel Up and Down Buttons**
Press to change the channel upwards or downwards.

⑪ **Mode Selector Switch**
"CLOCK" position is for setting Digital Clock for Time of Day. "NORMAL" position is for normal clock operation, and for check on programmed times.
"PROGRAMME" position is for presetting of unattended recording.

⑫ **PROGRAMME Button [PROGRAMME]**
Used to select a programme number to be set for unattended recording and to confirm the contents of preset programmes.

⑬ **ON Button [ON]**
Push to preset a starting time for recording.

⑭ **OFF Button [OFF]**
Push to preset a stop time for recording.

⑮ **DAY Buttons [DAY]**
For setting of the Day.
"+" Button will advance days.

⑯ **HOUR Buttons [HOUR]**
For setting of the Hour.
"+" Button will advance hours and "−" Button will retrace hours.

⑰ **Min Buttons [MIN]**
For setting of the Minute.
"+" Button will advance minutes and "−" Button will retrace minutes.

⑱ **Timer Rec Switch [TIMER REC]**
Push after programming unattended recording.
When TIMER REC is ON, you CANNOT operate the unit and the recorder manually.

⑲ **One Touch Timer Recording Button [OTR]**
Enables you to do impromptu recordings at any time. Just select the channel and push the OTR Button for 30, 60, 90 or 120 minutes of recordings.

⑳ **Dim/Bright Switch [BRT/DIM]**
Changes the brightness of the Digital Clock.

㉑ **Operation Switch [TUNER]**
Turns the unit on and off.

REAR

㉒ **VTR Connector [VTR]**
For connection with RF OUT of the recorder.

㉓ **RF Signal Level Switch [LEVEL]**
Used to attenuate the reception of the VHF and/or UHF antenna signals.
If the reception is normal, set to "HIGH". If the signal strength is high and the stripped pattern appears at the top of the picture on TV, set to "LOW".

㉔ **RF Output Connector [RF OUT]**
For connection to the antenna terminal (COAXIAL type) of TV with the DIN-DIN Coaxial Cable supplied with the recorder.

㉕ **RF Input Connector [RF IN]**
For connection with the external antenna.

㉖ **Adaptor Cable [VTR]**
Connect to Adaptor Terminal of the recorder.

㉗ **AC Power Cord [AC IN]**
Connect to a AC outlet.

RF OUTPUT CHANNEL

An RF converter built into the Portable Recorder NV-100 will allow you to play back the tape on a TV set through an unused broadcast channel. For this purpose your TV must be tuned to the RF Output channel in the following way.

1. Make connection as shown in the section "INSTALLATION".
2. Turn TV on and select a spare channel that will be used for playback, in some cases this may be marked A/V or VCR.
3. Turn on the unit and the recorder.
4. Set TEST SIGNAL to "ON" and adjust TV until the pattern shown below is received.

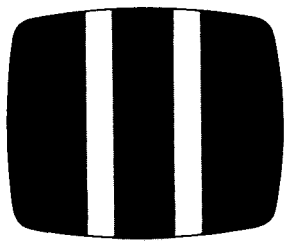

5. Set TEST SIGNAL to "OFF". Your TV is now ready to receive the RF output signal from the recorder.

Note:
When TEST SIGNAL is in "ON", the striped pattern will be seen on TV. When it is in "OFF", you can use the unit normally.

TUNER SETTING

- Your NV-V10 can receive up to 16 TV stations. The tuner can be received any channel within the range of channels as shown in the table.

	VHF		UHF
	I	III	U
NV-V10-B	—	—	21 — 69
NV-V10-E	Band I 2 — 4	Band III 5 — 12	Band IV/V 21 — 69
NV-V10-EO	E2 — S3	M1 — U9	21 — 69

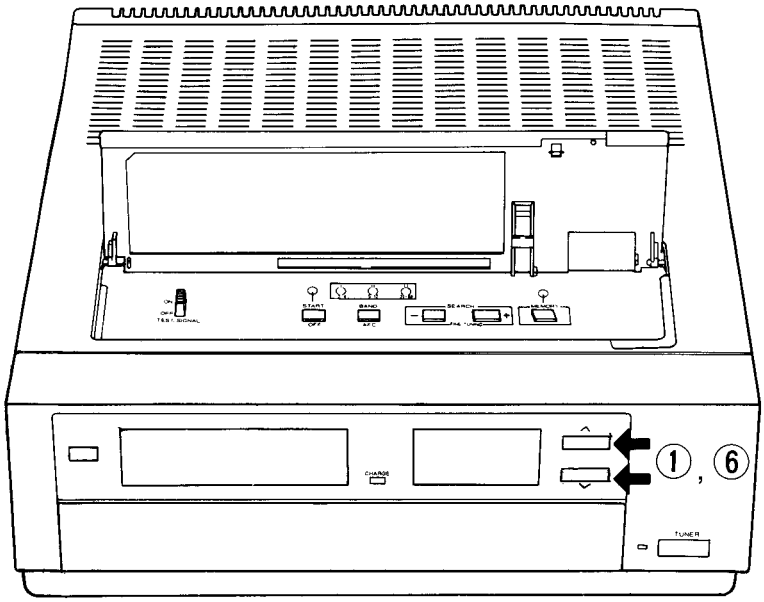

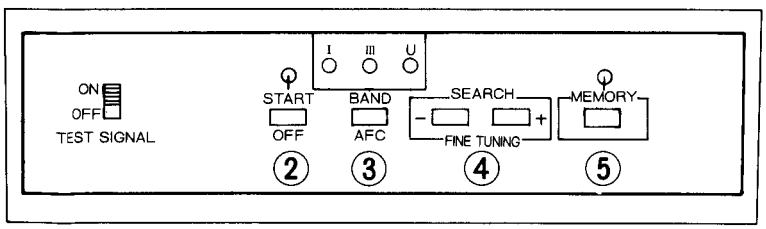

- Connect the deck (NV-100) and TV set to the tuner, switch on the power and set the Timer Rec button to OFF. Turn TV Tuner and Recorder ON.

① Select the channel.
② Press the Start Button. The corresponding lamp lights up.
③ The band can be selected by pressing the BAND Button. Push this button once to advance to the next band. (The corresponding lamp lights up.)
- It may be faster to press the Band Button to select the band than to press the Search Button.
- The NV-V10-B (for the U.K.) does not come with a band button. Therefore, this operation is not necessary if you have purchased this particular model.

④ The broadcasting stations are automatically tuned in by pressing the (+) or (−) SEARCH Button once. (The START Lamp will flash on and off during Search).
When the tuner is tuned in to the station, the START Lamp changes to a lighted state, the AFC Indicator appears on the channel display panel and the search operation is concluded.
If the station received is not the desired one, press the (+) or (−) SEARCH Button again.
When the (+) button is pressed, " ▬ " on the channel display increases one by one to 6 pieces (to high channel range).
When the (−) button is pressed, " ▬ " on the channel display panel decreases one by one to 0 (to low channel range).

⑤ The tuner is tuned in to the desired station, push the MEMORY Button to memorize it.

⑥ To set the next channel, select the Channel Up and Down Switch and then repeat steps ③ through ⑤

⑦ After all the desired channels have been set, push the Start Button OFF. The lamp goes OFF and the AFC Indicator appear on the channel display panel.

TO FINE TUNE THE CHANNEL

If it should be necessary to fine tune a channel to obtain a clear picture, adjust the fine tuning manually as follows.

1. Check that the START Button is set to OFF.
2. Press and hold "+" or "−" FINE TUNING Button - the AFC indicator on the channel display panel will disappear - until the best possible picture is obtained. Release the Button when you get a clear picture.
3. After the fine tuning is completed, push the MEMORY Button to lock the fine tuning of channel.

- If you wish to restore the AFC function, set the AFC Button to ON.

RECORDING TV PROGRAMMES

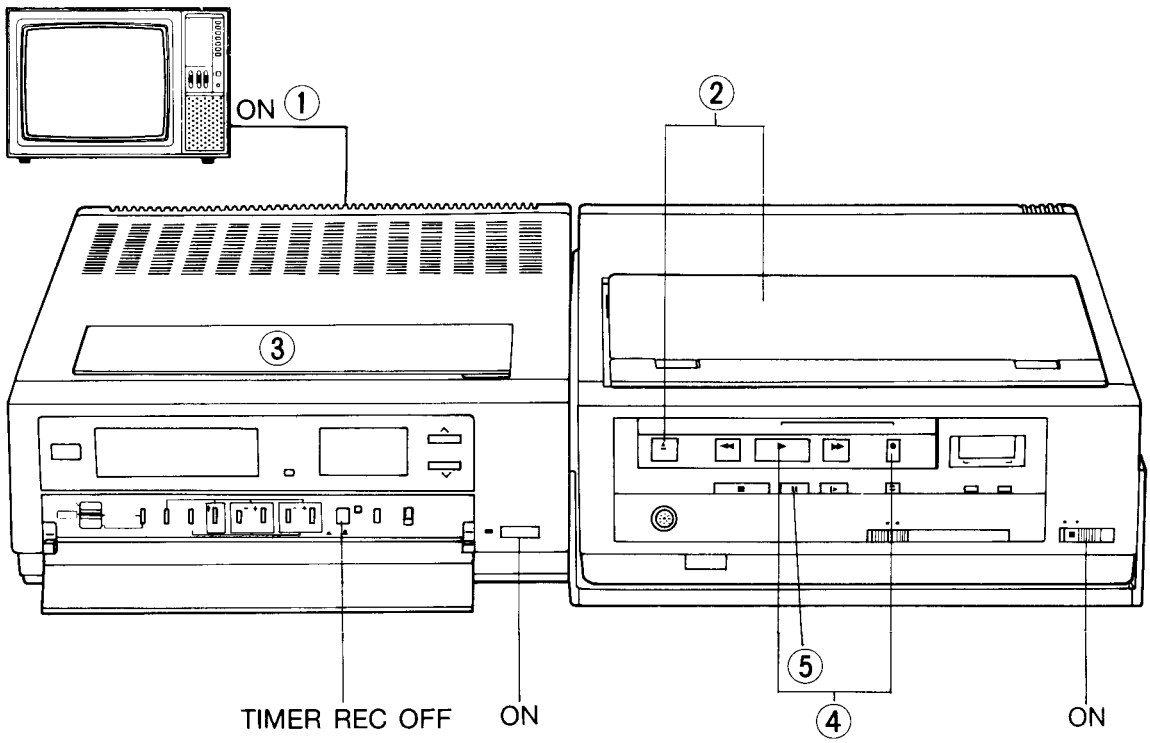

① Turn the TV on and tune it to the RF Output channel.

② Insert a cassette.

③ Select a programme to be recorded and confirm proper reception on TV.

④ Push REC together with PLAY.

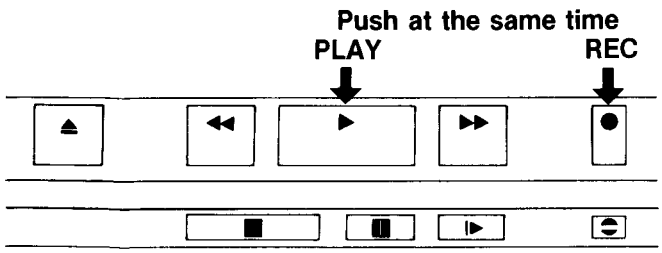

⑤ Push PAUSE/STILL to stop the tape temporarily if you wish to avoid recording unwanted material of a TV programme.

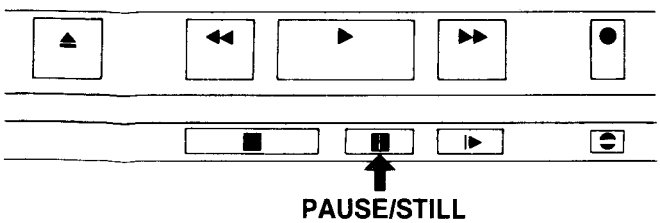

Notes:

- Do not keep the recorder in the pause mode in excess of 4 minutes at a time. The recorder will automatically release after about 5 minutes and stop.
- When joining a new recording to already recorded material from the stop mode, first play back the last part of the already recorded material in order to confirm its end point, and then start recording after stopping the tape temporarily.
- If the cassette tab is missing no recording can be performed.
- Connect the Wired Remote Controller (NV-A13, optional) to REMOTE to operate Rec, Rec-Pause mode from a distance.
  Wireless Remote Controller (NV-A17, optional) can also operate the unit from a distance.
- If you wish to view another programme while you are recording, select the channel to be viewed on TV.

PLAYBACK

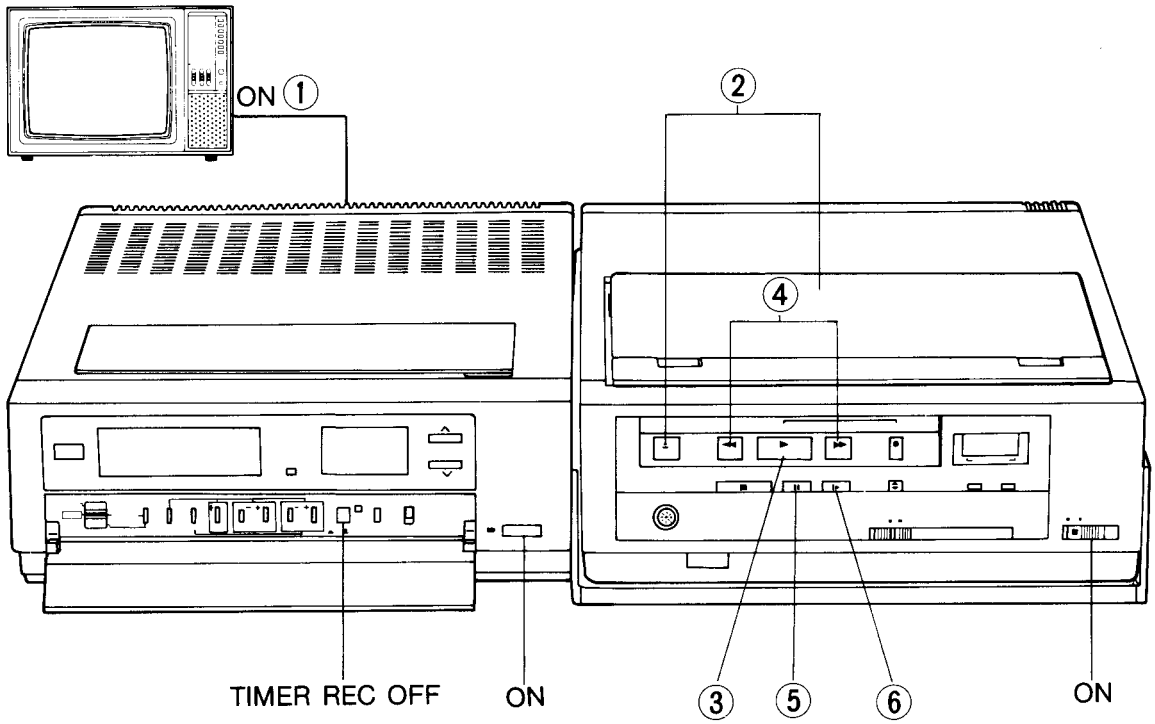

① Turn the TV on and tune it to the RF Output channel.

② Insert a cassette.

③ Push PLAY.

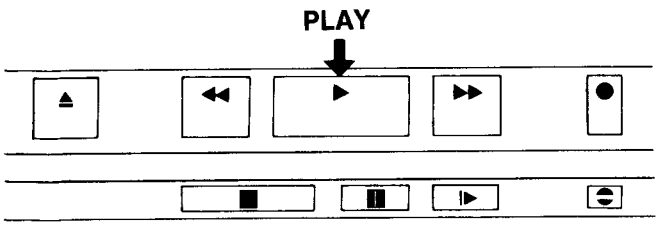

● Use CUE/REVIEW, PAUSE/STILL or SLOW if you wish to view multi-motion pictures.

④ Press REVIEW or CUE to rapidly locate a particular segment. (about 5 times normal speed).

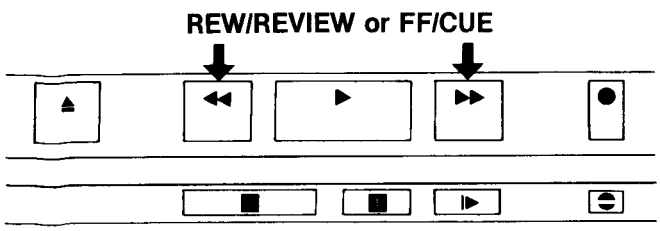

⑤ Push PAUSE/STILL to view a still-frame picture.

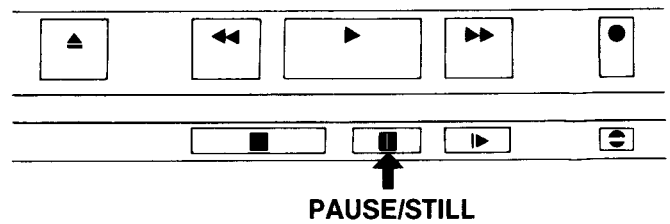

⑥ Push SLOW to view a fine-slow picture. (about 1/5 normal speed)

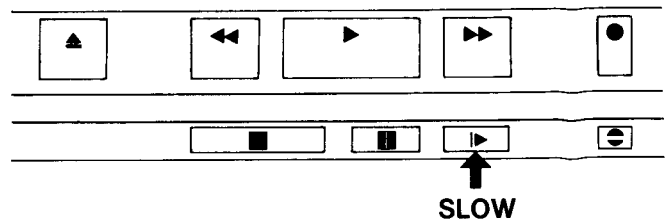

The Remote Controller (option) — Wireless remote controller (NV-A17), Wired remote controller (NV-A13) — can operate the multi-motion playback from a distance.

BATTERY CHARGING

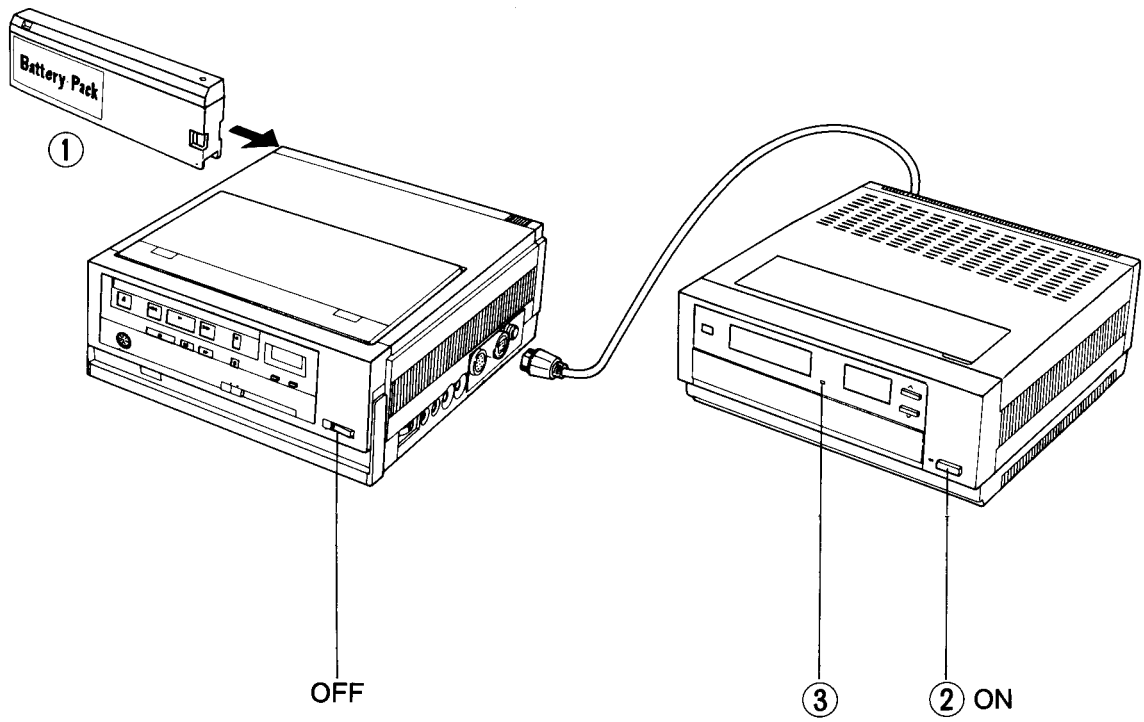

- Turn the unit on and set TIMER REC off.
- Set the both unit power off and connect the Adaptor-Cable of the Tuner to the Adaptor Terminal of the recorder.

① Insert the battery pack into the battery compartment of the recorder.

② Turn the unit on, and the battery pack in the recorder will start to charge.

③ The CHARGE Lamp will light up during charging.

Notes:

- The CHARGE lamp will usually go off in 2 hours, but charging time varies according to the battery pack's condition (the suitable ambient temperature is 10°C ~ 30°C). Continue charging for 2 hours after the CHARGE lamp goes off to prolong the life of the battery pack.
- Overcharging will make the battery pack's life shorter. Do not keep charging more than 24 hours.
- The useful operation time of the battery pack will gradually decrease after several discharges and recharges. The battery pack is no longer serviceable if the operation time is too short even after a sufficient charge.

ELECTRICAL ADJUSTMENT PROCEDURES

This section provides complete electrical adjustment procedure which may be required for electronic circuits of ELECTRONIC TUNER/TIMER UNIT.

1. Test Equipment
   To perform the electrical adjustments completely, the following equipments are required.
   1. DVM (Digital Volt Meter)
      Voltage Range: 0.01 - 50V
   2. Frequency Counter
      Frequency Range: 0 - 10MHz
   3. DC Voltage Supply: (0 - 20V)
   4. Dual-Trace Oscilloscope
      Voltage Range: 0.05 - 50V/Div.
      Frequency Range: DC - 10MHz
      Probes: 10:1, 1:1
   5. TV Channel Signal Generator
   6. DC Amperemeter
      Current Range: 0 - 10A
   7. VIF Sweep & Trap Generator
   8. Spectrum Analyzer
   9. Color TV Receiver or Monitor
   10. Attenuator (-0dB - -50dB)
   11. Monitor Scope
   12. Non-metalic Screwdriver (Using TV Demodulator Section) and Plastic Tip Driver.

2. Adjustment Procedures
   These adjustment procedures consist of the following sections.
   1. Power Supply Section
   2. TV Demodulator Section (NV-V10E/EO)
   3. TV Demodulator Section (NV-V10B)
   4. Timer Section

2-1. Power Supply Section

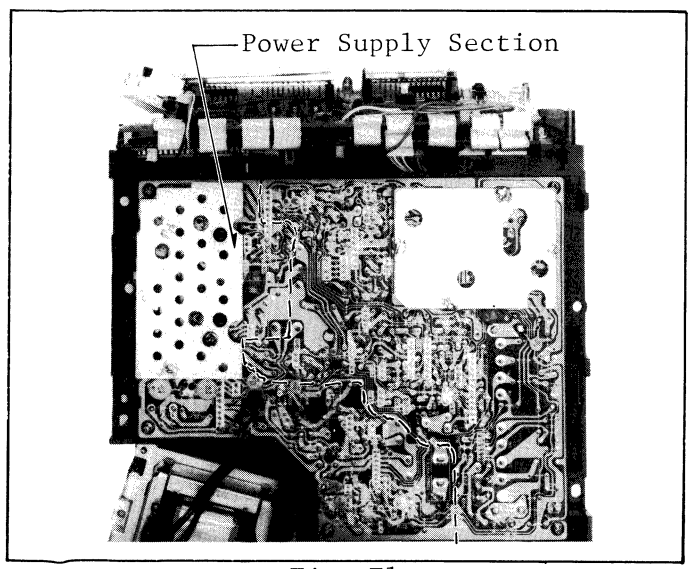

Fig. E1

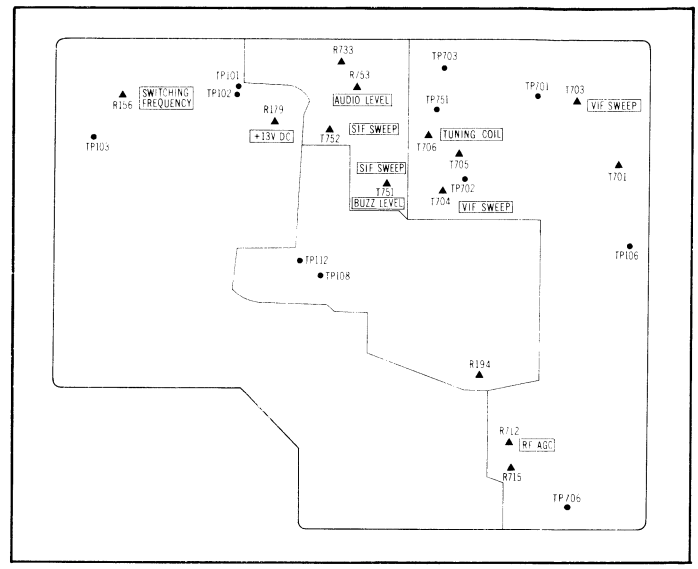

Fig. E2

2-1-1. Switching Frequency Adjustment

Test Point: Q157 (C)
Adjustment: R156

1. Connect the 10.8Ω Resistor between pin 5 and pin 6 of P105.
2. Connect the oscilloscope to the collector of Q157.
3. Adjust R156 so that the frequency is 25kHz ± 0.5kHz.

2-1-2. +13V DC Adjustment

Test Point: TP102
Adjustment: R179

1. Connect the 10.8Ω Resistor between pin 5 and pin 6 of P105.
2. Connect the D.V.M to TP102.
3. Adjust R179 so that the voltage is 13.0 ± 0.1V DC.

2-2. TV Demodulator Section

Model No. NV-V10E

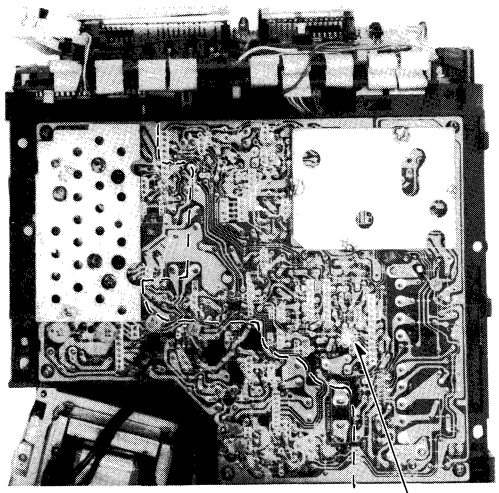

TV Demodulator Section

Fig. E3

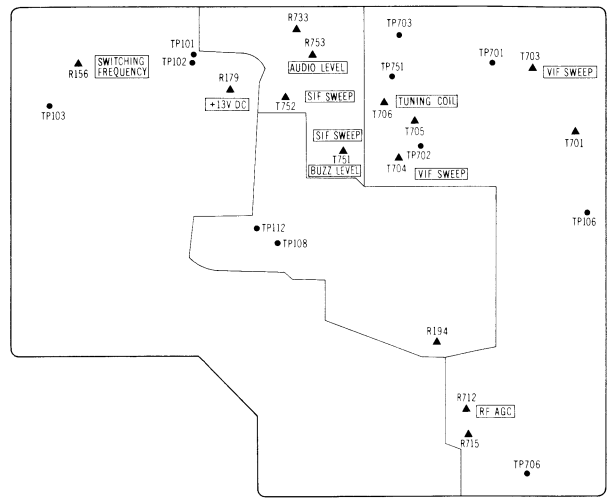

Fig. E4

This section provides complete electrical adjustment procedures which may be required for TV demodulator circuit.

Test Equipment

To make adjustments completely, following equipments are required.

1. VIF Sweep Generator
   .....38.9MHz
2. SIF Sweep Generator
   .....5.5MHz ± 150kHz
3. Digital Volt Meter
4. Oscilloscope

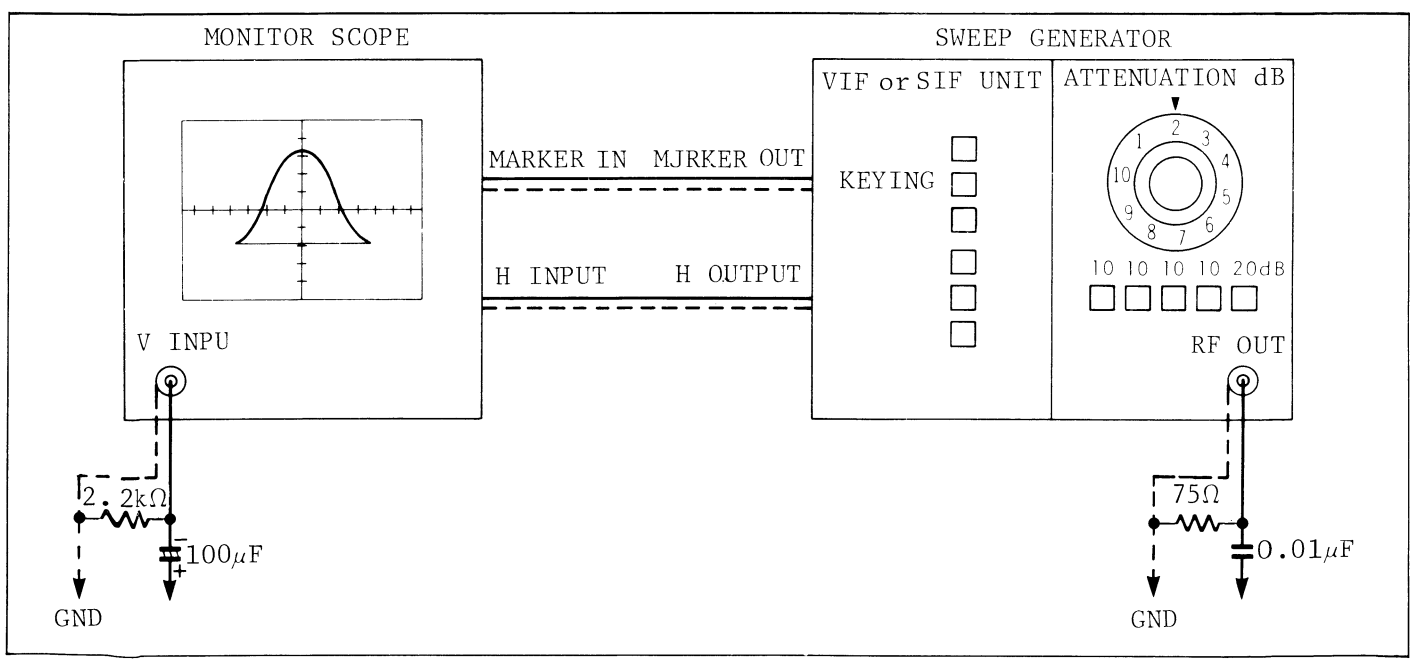

Fig. E5 Connection of Measuring Equipment

2-2-1. 38.3MHz Tuning Coil Adjustment

Test Point: TP706
Adjustment: T706, T705

1. Connect the H-Out of the VIF Sweep Generator to the H-In of the scope.
2. Connect the Marker-Out of the VIF Sweep Generator to the Marker-In or Z Terminal of the Scope.
3. Connect the output of the VIF Sweep Generator to TP702.
4. Connect the scope to TP706.
5. Supply the DC Voltage (4 ∿ 5V) to TP701 so that the noise level on the sweep waveform becomes minimum.
6. Turn T706 2 turns clockwise or counterclockwise.
7. Adjust the output of the VIF Sweep Generator so that the sweep wave becomes 0.1Vp-p.
8. Adjust T705 so that the marker position of 38.9MHz becomes maximum as shown in Fig. E6.

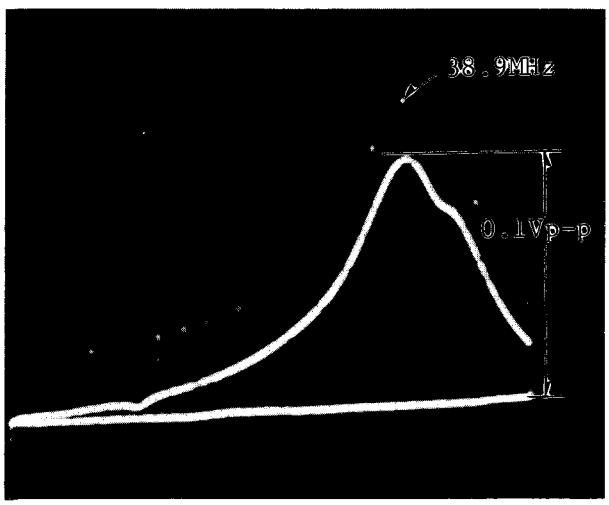

Fig. E6.

9. After this completed adjustment, adjust T706 so that 38.9MHz marker position is shown in Fig. E7.

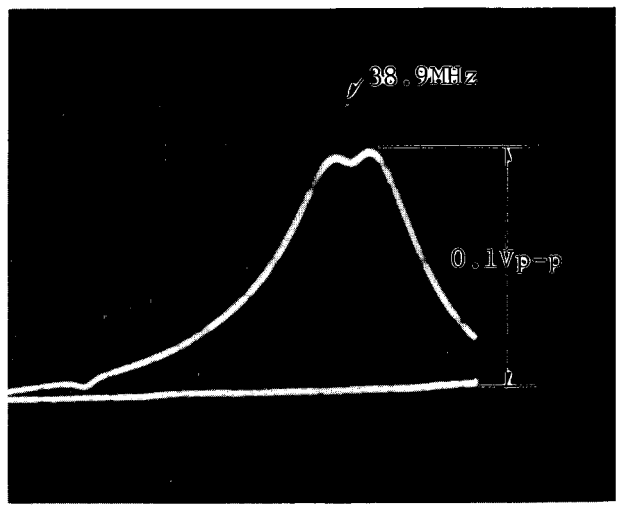

Fig. E7.

2-2-2. VIF Tuner Converter Coil Adjustment

Test Point: TUNER TP
Adjustment: TUNER CONVERTER COIL

1. Connection of measuring equipments is shown in Fig. E5.
2. Set the channel selector to the VHF High position (V_H) and set the tunning button so that the voltage at pin 1 of P7001 (BT Voltage) becomes 10V ± 0.5 Volts DC.
3. Connect the DC Voltage Regurator (6.5V ± 0.2V) to AFC terminal of Tuner Unit.
4. Connect the jumper wire between TP703 and GND.
5. Connect the output of VIF Sweep Generator to Tuner test point.
6. Connect the scope to TP707.
7. Adjust the attenuator of VIF Sweep Generator so that the amplitude of output waveform becomes 0.1Vp-p.
8. Adjust the tuner converter coil so that the amplitude at 34.47MHz marker position and 38.9MHz marker position are same.

2-2-3. VIF Sweep Adjustment

Test Point: TP706
Adjustment: T704, T703

1. Connection of measuring equipments is the same as in the 38.9 MHz Turning Coil Adjustment.
2. Set the Channel Selector to the VHF High position (VH) and see the tunning button so that the voltage at pin 1 of P7001 becomes 10 ± 0.5 Volts DC.
3. Connect the jumper wire between TP703 (RF AGC) and ground.
4. Connect the 100Ω resistor between TP704 and TP705.
5. Connect the scope to TP706.
6. Connect the output of VIF Sweep Generator to tuner test point.
7. Adjust the output of the VIF Sweep Generator so that the level of VIF waveform becomes 1.0Vp-p.
8. Release 20dB from the attenuator of the Sweep Generator.
9. Set DC Voltage Regurator to TP701, and supply the Voltage so that the level of VIF waveform becomes 1.0Vp-p.
10. Adjust T704 so that the attenuation of the 33.4MHz trap becomes maximum.
11. Adjust T703 (A) so that the attenuation of the 40.4MHz trap becomes maximum.
12. Adjust T701 and (C)(D)(E)(F) of T703 so that the Sweep output waveform becomes as shown Fig. E8.

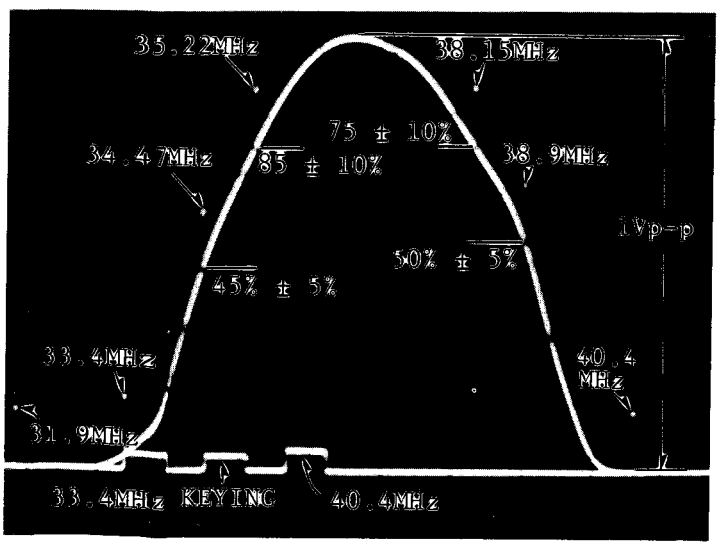

Fig. E8. VIF Waveform

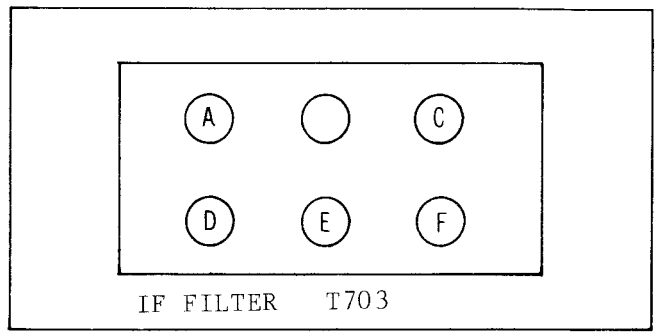

Fig. E9

2-2-4. RF AGC Adjustment

Test Point: TP703
Adjustment: R712

1. Set the AFC SW to ON.
2. Tune in VHF colour bar signal.
3. Set the input level of electric field to 65 ± 2dB. (Using the Attenuator and Spectrum Analyzer)
4. Connect the D.V.M to TP703.
5. Turn the VHF AGC (R712) fully counterclockwise from component side. (Set to the maximum voltage)
6. Then slowly turn the R712 till just before the Voltage drop.
7. Change the input electric field from 65dB to 68dB.
8. Confirm that the voltage at TP703 is dropped more than 1.5 Volts.
9. Next tune in UHF colour bar signal.
10. Set the input level at electric field to 60 ± 2dB.
11. Turn the UHF AGC (R715) fully counterclockwise from component side. (Set to the maximum voltage)
12. Then slowly turn the R715 till just before the voltage drop.
13. Change the input electric field from 60dB to 63dB.
14. Confirm that the voltage at TP703 is dropped more than 1.5 Volts.

2-2-5. SIF Sweep Adjustment

Test Point: TP752
Adjustment: T752, T751

1. Connect the H-Out of the SIF Sweep Generator to the H-In of the scope.
2. Connect the Marker-Out of the SIF Sweep Generator to the Marker-In or Z-terminal of the scope.
3. Connect the oscilloscope to the output of the SIF Sweep Generator and set the sweep output to 6mVp-p.
4. Connect the output of the SIF Sweep Generator to TP751.
5. Connect the scope to TP752.
6. Connect the jumper wire between TP701 and GND.
7. Adjust T752 and T751 so that the amplitude at 5.5MHz is maximum.
8. Adjust T752 so that the 5.5MHz trap becomes maximum.

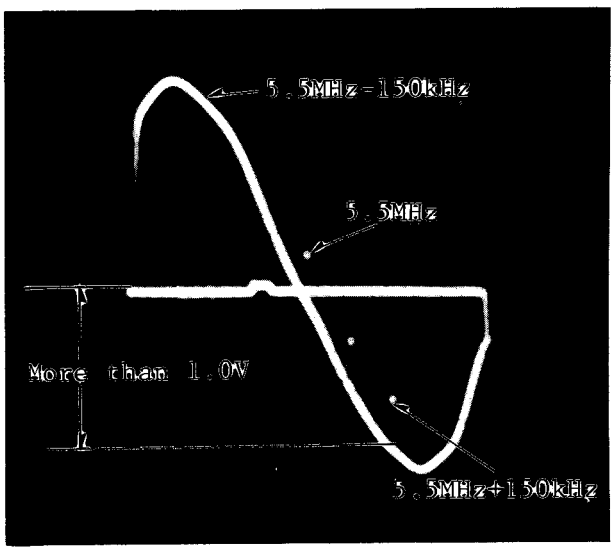

Fig. E10. SIF Waveform

2-2-6. Audio Level Adjustment

Test Point: Pin 13 of one touch connector
Adjustment: R753

1. Set the AFC SW to ON.
2. Tune a audio signal of 1kHz with 30% modulated frequency. (VHF)
3. Connect the oscilloscope to pin 13 of one touch connector (2.2kΩ BALANCE).
4. Adjust R753 so that the level is 240 ± 50mVp-p.

2-2-7. Buzz Level Adjustment

Test Point: Pin 13 of one touch connector
Adjustment: T751

1. Set the AFC SW to ON.
2. Tune a Philips test pattern with NO audio. (VHF)
3. Connect the oscilloscope to pin 13 of one touch connector. (2.2kΩ BALANCE).
4. Adjust T751 so that Buzz level is minimum.

2-3. TV Demodulator Section

Model No. NV-V10B

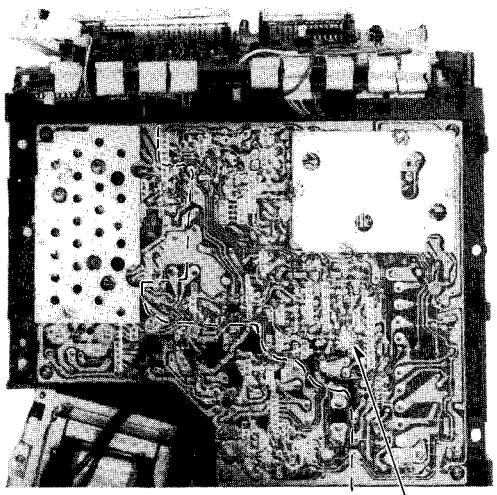

Fig. E11

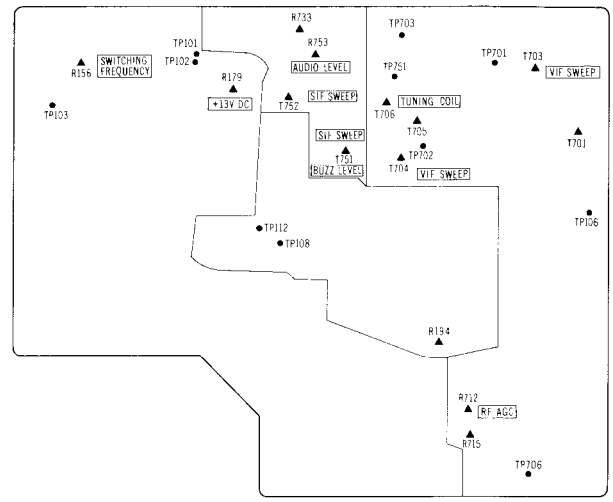

Fig. E12

This section provides complete electrical adjustment procedures which may be required for TV demodulator circuit.

Test Equipment

To make adjustments completely, following equipments are required.

1. VIF Sweep Generator
   ..... 39.5MHz
2. SIF Sweep Generator
   ..... 6.0MHz ± 150kHz
3. Digital Volt Meter
4. Oscilloscope

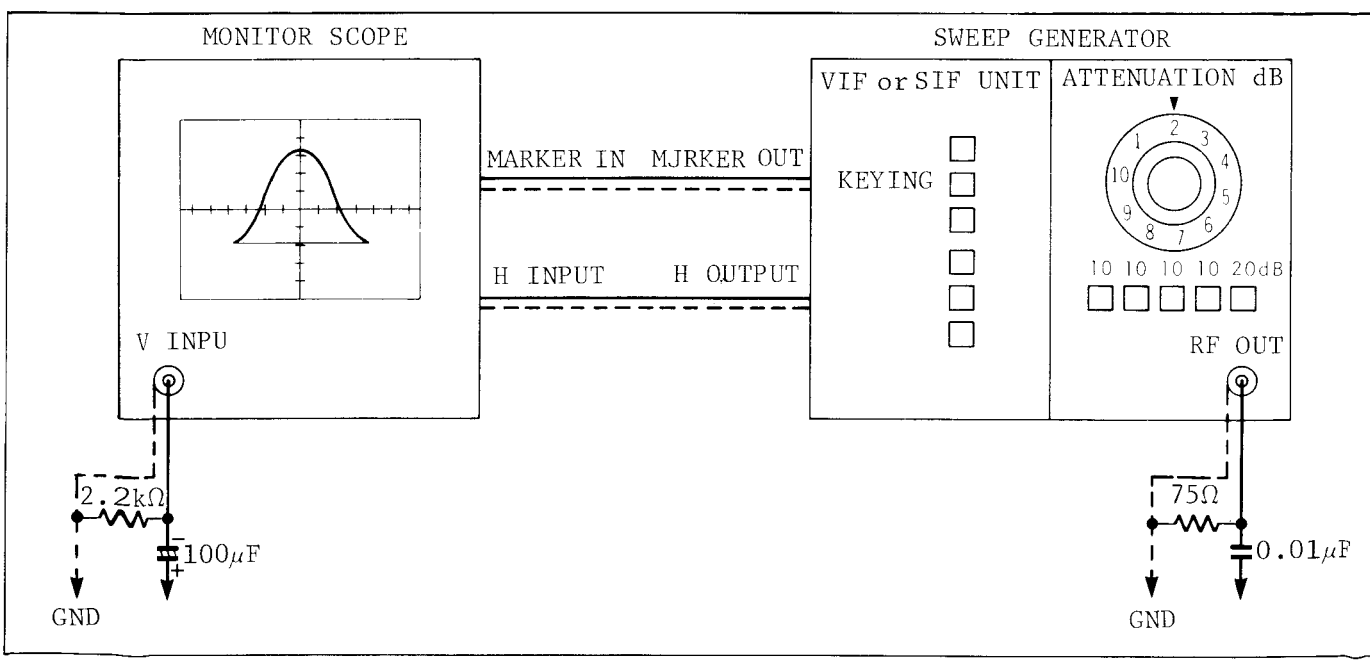

Fig. E13. Connection of Measuring Equipment

2-3-1. 39.5MHz Tuning Coil Adjustment

Test Point: TP706
Adjustment: T706, T705

1. Connect the H-Out of the VIF Sweep Generator to the H-In of the scope.
2. Connect the Marker-Out of the VIF Sweep Generator to the Marker IN or Z Terminal of the Scope.
3. Connect the output of the VIF Sweep Generator to TP702.
4. Connect the scope to TP706.
5. Supply the DC Voltage (4 ∿ 5V) to TP701 so that the noise level on the sweep waveform becomes minimum.
6. Turn T706 2 turns clockwise or counterclockwise.
7. Adjust the output of the VIF Sweep Generator so that the Sweep wave becomes 0.1Vp-p.
8. Adjust T705 so that the marker position of 39.5MHz becomes maximum as shown in Fig. E14.

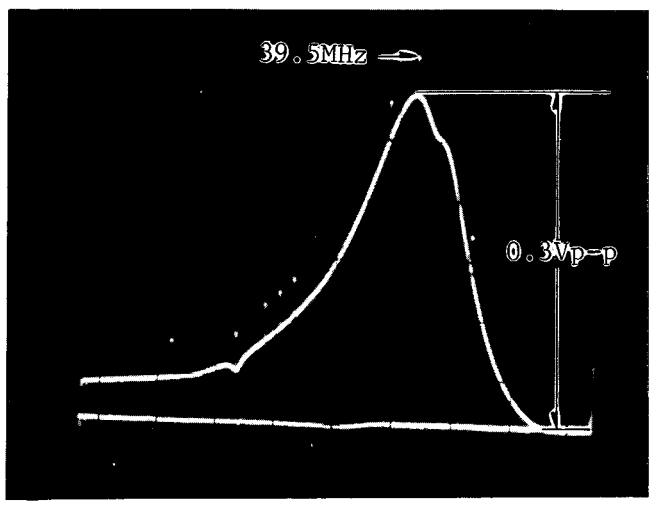

Fig. E14.

9. After this completed adjustment, adjust T706 so that 39.5MHz marker position is shown in Fig. E15.

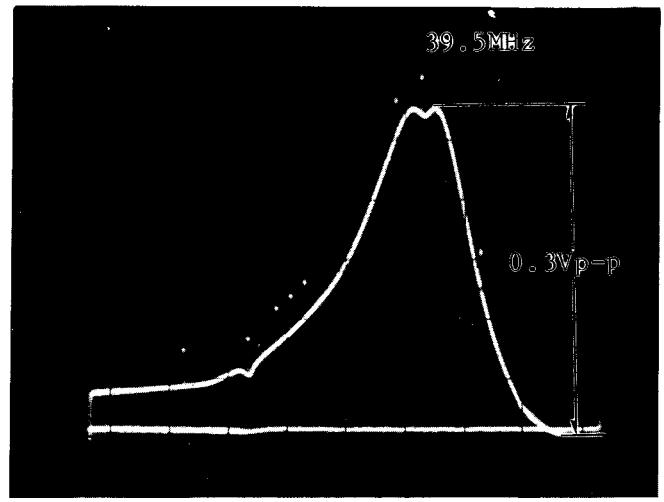

Fig. E15.

2-3-2. VIF Tuner Converter Coil Adjustment

Test Point: Tuner TP
Adjustment: Tuner Converter Coil

1. Connection of measuring equipments is shown in Fig. E13.
2. Set the channel selector to the VHF High position (V_H) and set the tunning button so that the voltage at pin 1 of P7001 (BT Votlage) becomes 11V ± 0.5Volts DC.
3. Connect the DC Voltage Regurator (6.5V ± 0.2V) to AFC terminal of Tuner Unit.
4. Connect the jumper wire between TP703 and GND.
5. Connect the output of VIF Sweep Generator to Tuner test point.
6. Connect the scope to TP707.
7. Adjust the attenuator of VIF Sweep Generator so that the amplitude of output waveform becomes 0.1Vp-p.
8. Adjust the tuner converter coil so that the amplitude at 35.07 MHz marker position and 39.5MHz marker position are same.

2-3-3. VIF Sweep Adjustment

Test Point: TP706
Adjustment: T704, T703

1. Connection of measuring equipments is the same as in the 39.5MHz Turning Coil Adjustment.
2. Set the Channel Selector to the VHF High position (VH) and set the tunning button so that the voltage at pin 1 of P7001 becomes 11 ± 0.5V DC.
3. Connect the jumper wire between TP703 (RF AGC) and ground.
4. Connect the 100Ω resistor between TP704 and TP705.
5. Connect the scope to TP706.
6. Connect the output of VIF Sweep Generator to tuner test point.
7. Adjust the output of the VIF Sweep Generator so that the level of VIF waveform becomes 1.0Vp-p.
8. Release 20dB from the attenuator of the Sweep Generator.
9. Set DC Voltage Regurator to TP701, and supply the Voltage so that the level of VIF waveform becomes 1.0Vp-p.
10. Adjust T704 so that the attenuation of the 33.5MHz trap becomes maximum.
11. Adjust T703 (A) so that the attenuation of the 41.5MHz trap becomes maximum.
12. Adjust T701 and (C)(D)(E)(G) of T703 so that the sweep output waveform becomes as shown Fig. E16.

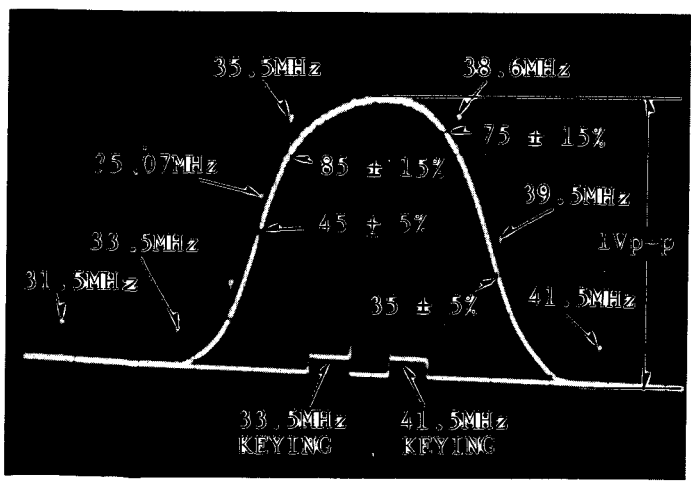

Fig. E16. VIF Waveform

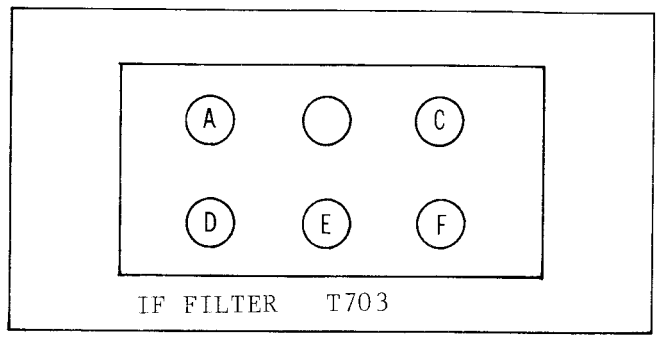

Fig. E17

2-3-4. RF AGC Adjustment

Test Point: TP703
Adjustment: R715

1. Set the AFC SW to ON.
2. Tune in UHF colour bar signal.
3. Set the input level of electric field to 60 ± 2dB. (Using the Attenuator and Spectrum Analyzer)
4. Connect the D.V.M to TP703.
5. Turn the UHF AGC (R715) fully counterclockwise from component side. (Set to the maximum voltage)
6. Then slowly turn the R715 till just before the Voltage drop.
7. Change the input electric field from 60dB to 63dB.
8. Confirm that the voltage at TP703 is dropped more than 1.5Volts.

2-3-5. SIF Sweep Adjustment

Test Point: TP752
Adjustment: T752, T751

1. Connect the H-Out of the SIF Sweep Generator to the H-In of the scope.
2. Connect the Marker-Out of the SIF Sweep Generator to the Marker-In or Z-terminal of the scope.
3. Connect the oscilloscope to the output of the SIF Sweep Generator and set the sweep output to 6 mVp-p.
4. Connect the output of the SIF Sweep Generator to TP751.
5. Connect the scope to TP752.
6. Connect the jumper wire between TP701 and GND.
7. Adjust T752 and T751 so that the amplitude at 6.0MHz is maximum.
8. Adjust T752 so that the 6.0MHz trap becomes maximum.

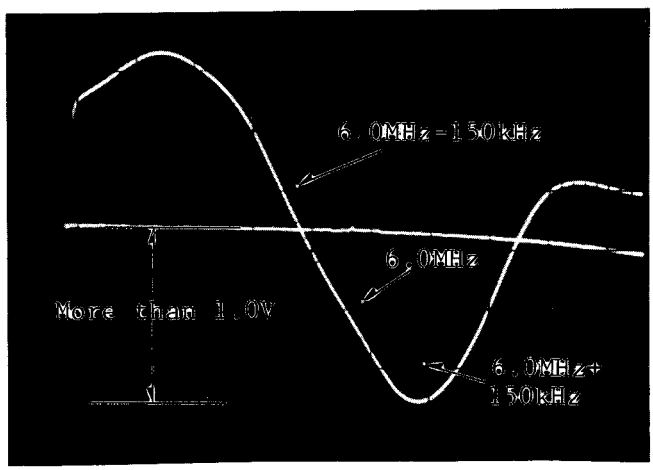

Fig. E18

2-3-6. Audio Level Adjustment

Test Point: Pin 13 of one touch connector
Adjustment: R753

1. Set the AFC SW to ON.
2. Tune a audio signal of 1kHz with 30% modulated frequency. (UHF)
3. Connect the oscilloscope to pin 13 of one touch connector (2.2kΩ BALANCE).
4. Adjust R753 so that the level is 240 ± 50mVp-p.

2-3-7. Buzz Level Adjustment

Test Point: Pin 13 of one touch connector
Adjustment: T751

1. Set the AFC SW to ON.
2. Tune a Philips test pattern with NO audio. (UHF)
3. Connect the oscilloscope to pin 13 of one touch connector. (2.2kΩ BALANCE).
4. Adjust T751 so that Buzz level is minimum.

2-3. Programmable Timer Section

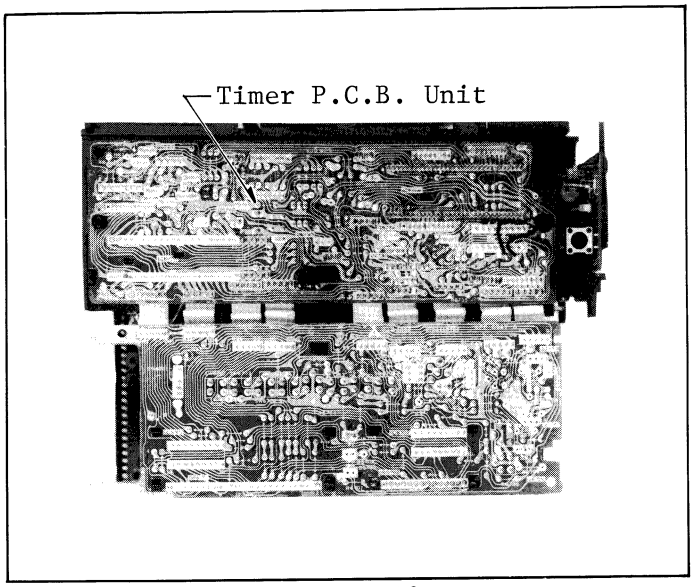

Fig. E19

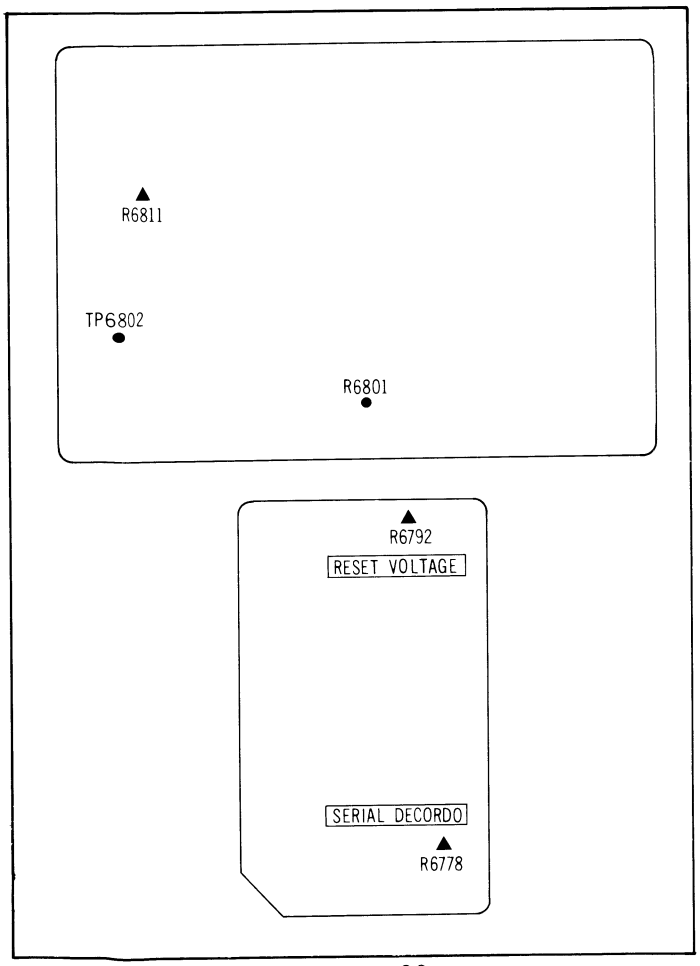

Fig. E20

2-3-1. Reset Voltage Adjustment

Test Point: Collector of Q6792
Adjustment: R6792

1. Disconnect the AC plug from the AC output.
2. Disconnect the connector P6703, P6705 and P6704.
3. Connect the 100kΩ Resister between the collector of Q6792 and emitter of Q6793.
4. Connect the D.V.M to the collector of Q6792.
5. Set the DC power Regurator to 4 ± 0.05V DC and connect it to the emitter of Q6793.
6. Connect the jumper wire between anode and cathode of D6793.
7. Turn the RESET (R6723) fully clockwise from component side.
8. Then slowly adjust R6723 counter-clockwise so that the read of D.V.M is suddenly changed. (The point is changed from the 3V over to the 1V down.)

2-3-2. Serial Decorder Adjustment

Test Point: Q6774 (C)
Adjustment: R6778

1. Disconnect P6703 and P6705.
2. Supply the DC Voltage 4.5 ± 0.05V
. to pin 2 of P6705.
3. Connect the D.V.M to the collector of Q6774.
4. Turn R6778 fully clockwise from component side.
5. Then slowly adjust R6778 counter-clockwise so that the read of D.V.M is suddenly changed.

LOCATION OF TEST POINT & CONTROLS

TV DEMODULATOR BOARD (NV-100E; VEP04114A)
(NV-100B; VEP04114B)
(NV-100EO; VEP04114C)

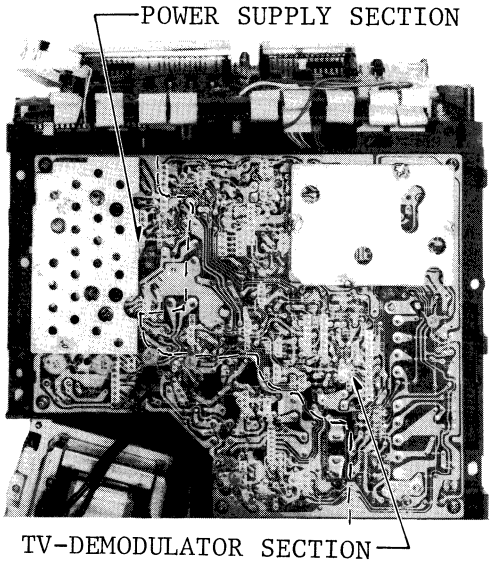

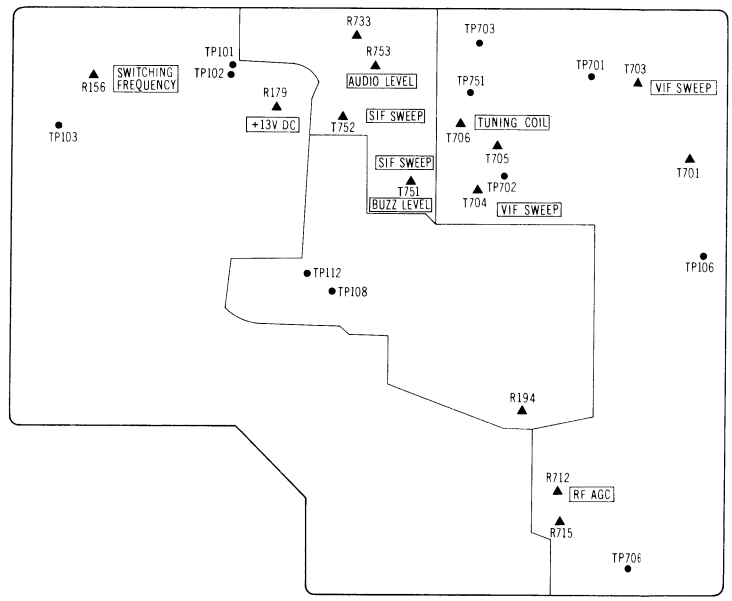

TIMER P.C.B. UNIT (NV-100E/EO; VEP4051A)
(NV-100B ; VEP4054B)

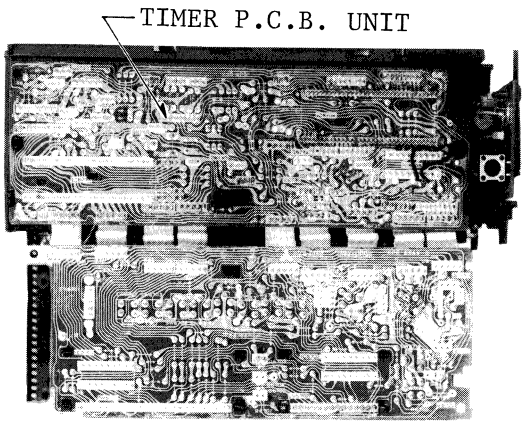

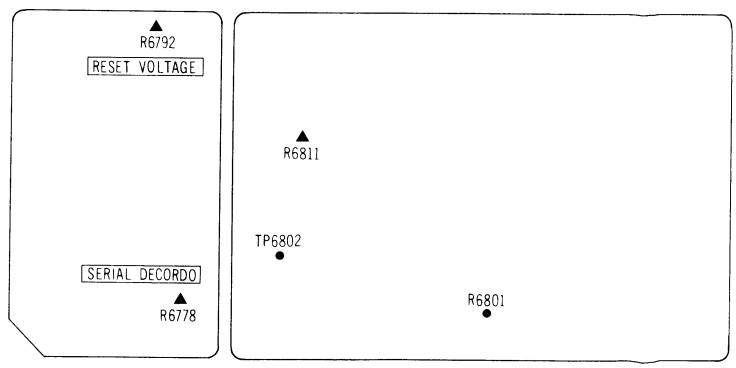

CIRCUIT BOARD LAYOUT

TOP VIEW

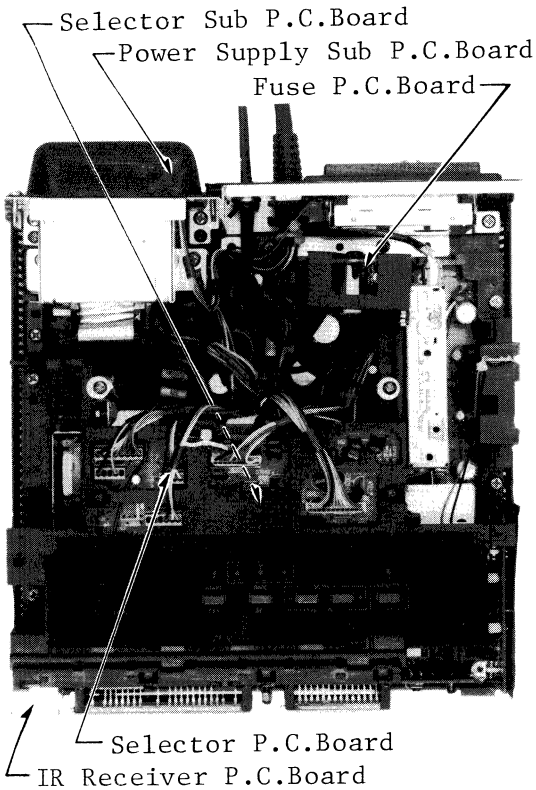

FRONT VIEW

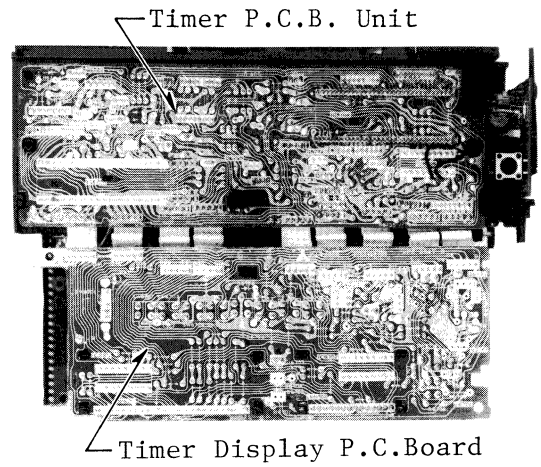

BOTTOM VIEW

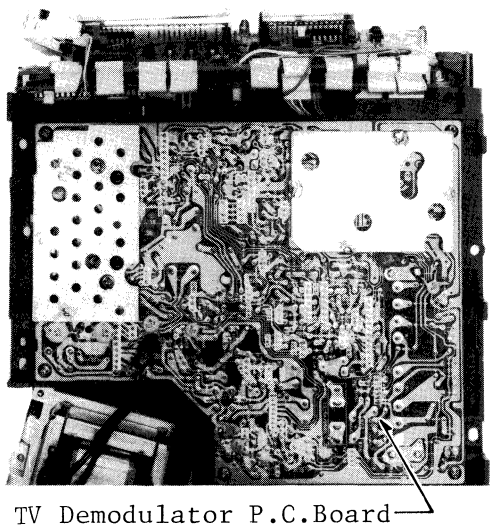

RIGHT VIEW

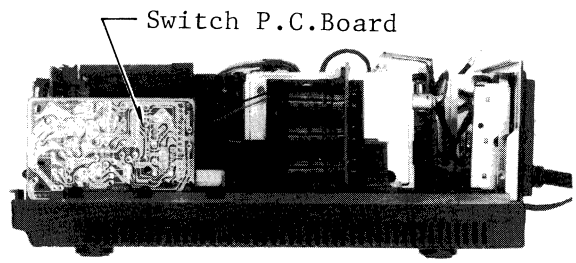

PROGRAMMABLE TIMER BLOCK DIAGRAM

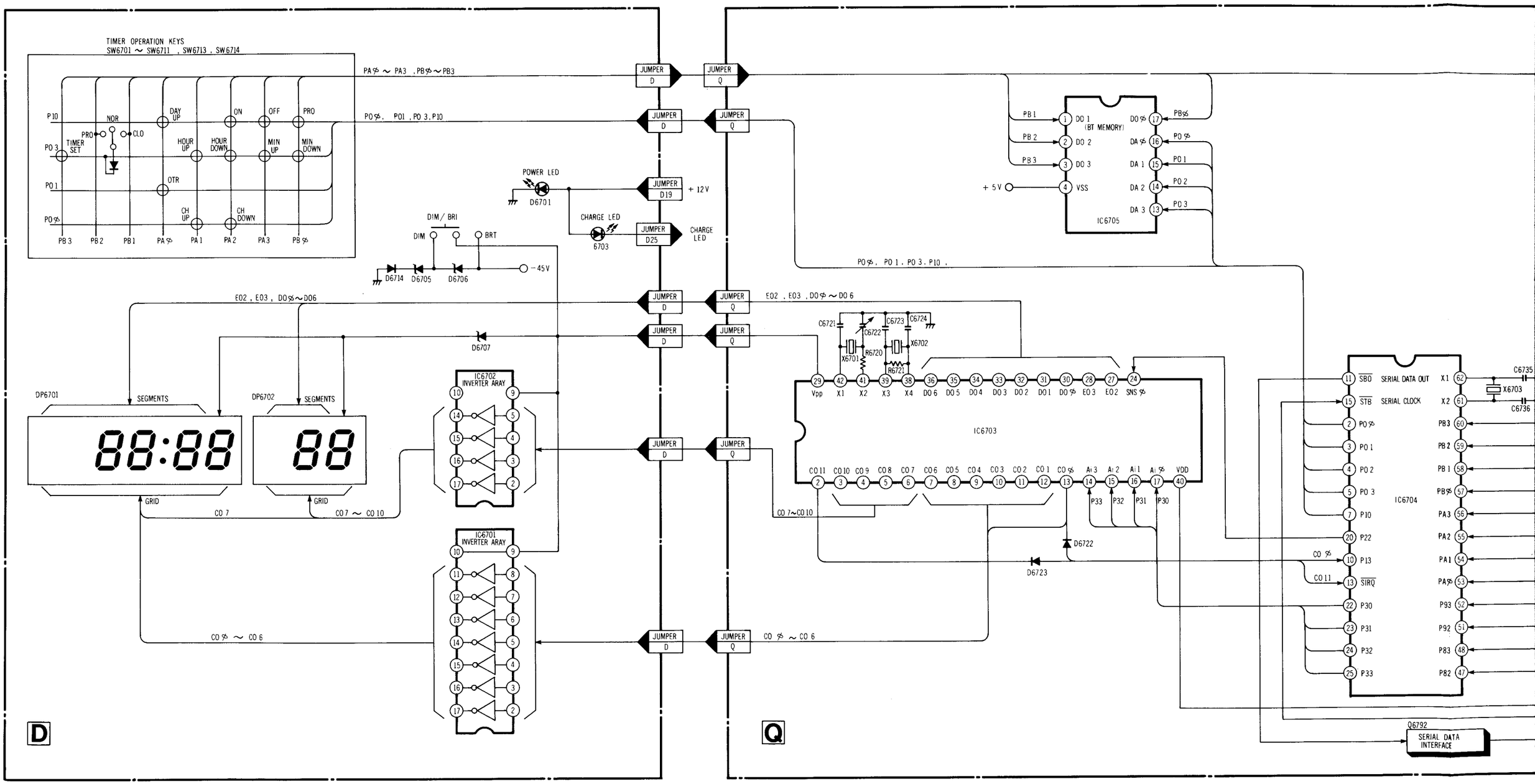

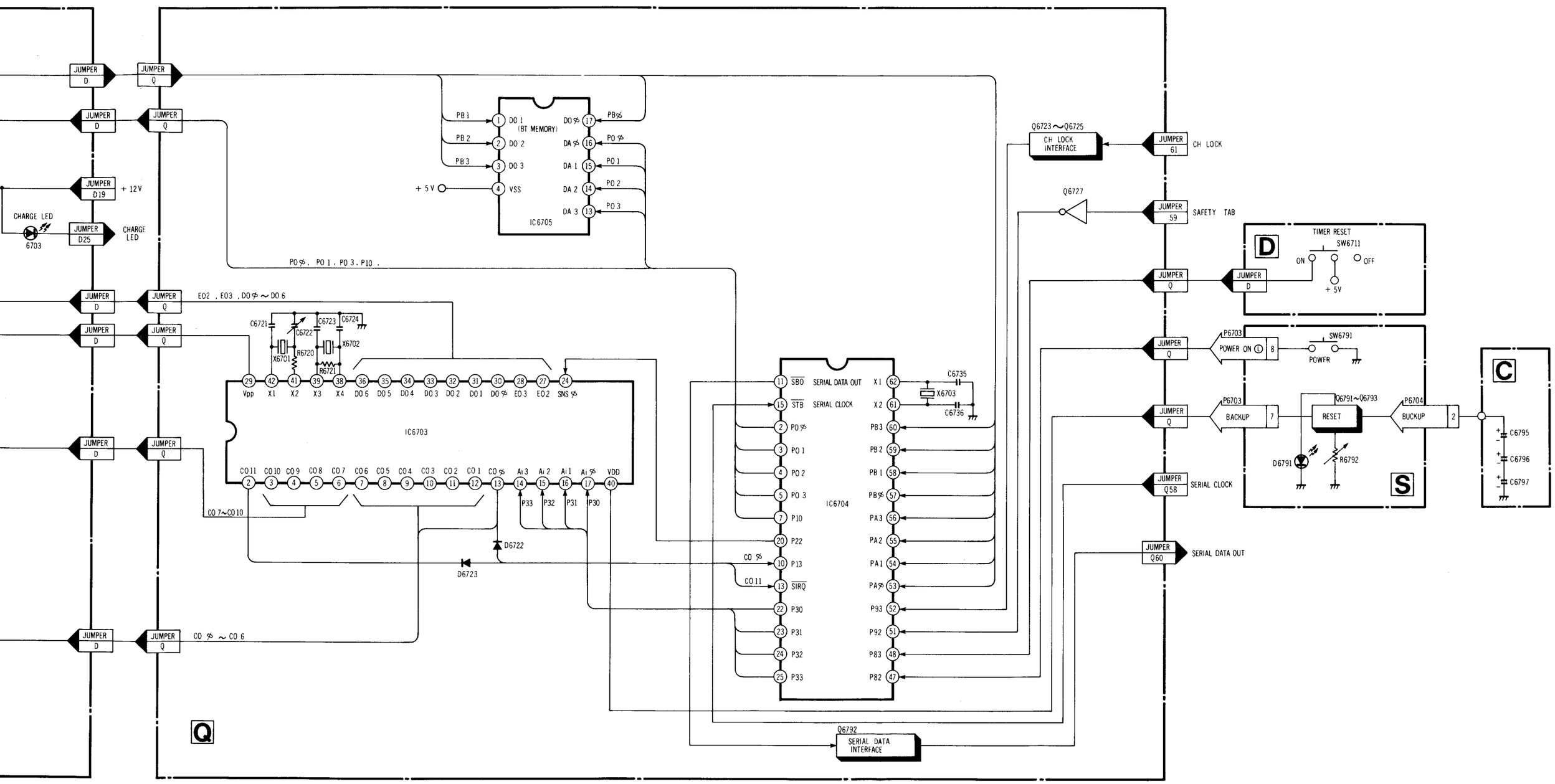
JUMPER D
JUMPER Q
JUMPER D19
+ 12V
CHARGE LED
JUMPER D25
CHARGE LED
6703
PB 1
PB 2
PB 3
DO 1 (BT MEMORY)
DO 2
DO 3
VSS
+ 5V
DO
PB
DA
PO
DA 1
DA 2
DA 3
IC6705
PO, PO 1, PO 3, P10,
EO2, EO3, DO ~ DO 6
C6721
C6722
C6723
C6724
X6701
X6702
R6720
R6721
Vpp X1 X2 X3 X4 DO 6 DO 5 DO 4 DO 3 DO 2 DO 1 DO EO 3 EO 2 SNS
IC6703
CO 11 CO 10 CO 9 CO 8 CO 7 CO 6 CO 5 CO 4 CO 3 CO 2 CO 1 CO Ai 3 Ai 2 Ai 1 Ai VDD
CO 7~CO 10
P33 P32 P31 P30
D6722
D6723
CO ~ CO 6
SBO SERIAL DATA OUT
STB SERIAL CLOCK
X1
X2
C6735
X6703
C6736
IC6704
SIRQ
SNS
Q6723~Q6725
CH LOCK INTERFACE
Q6727
CH LOCK
SAFETY TAB
TIMER RESET
SW6711
ON
OFF
+ 5V
P6703
POWER ON
SW6791
POWER
BACKUP
Q6791~Q6793
RESET
P6704
BUCKUP
D6791
R6792
C6795
C6796
C6797
SERIAL CLOCK
SERIAL DATA OUT
Q6792
SERIAL DATA INTERFACE
D
C
S
Q

POWER SUPPLY AND HIGH SPEED CHARGE BLOCK DIAGRAM

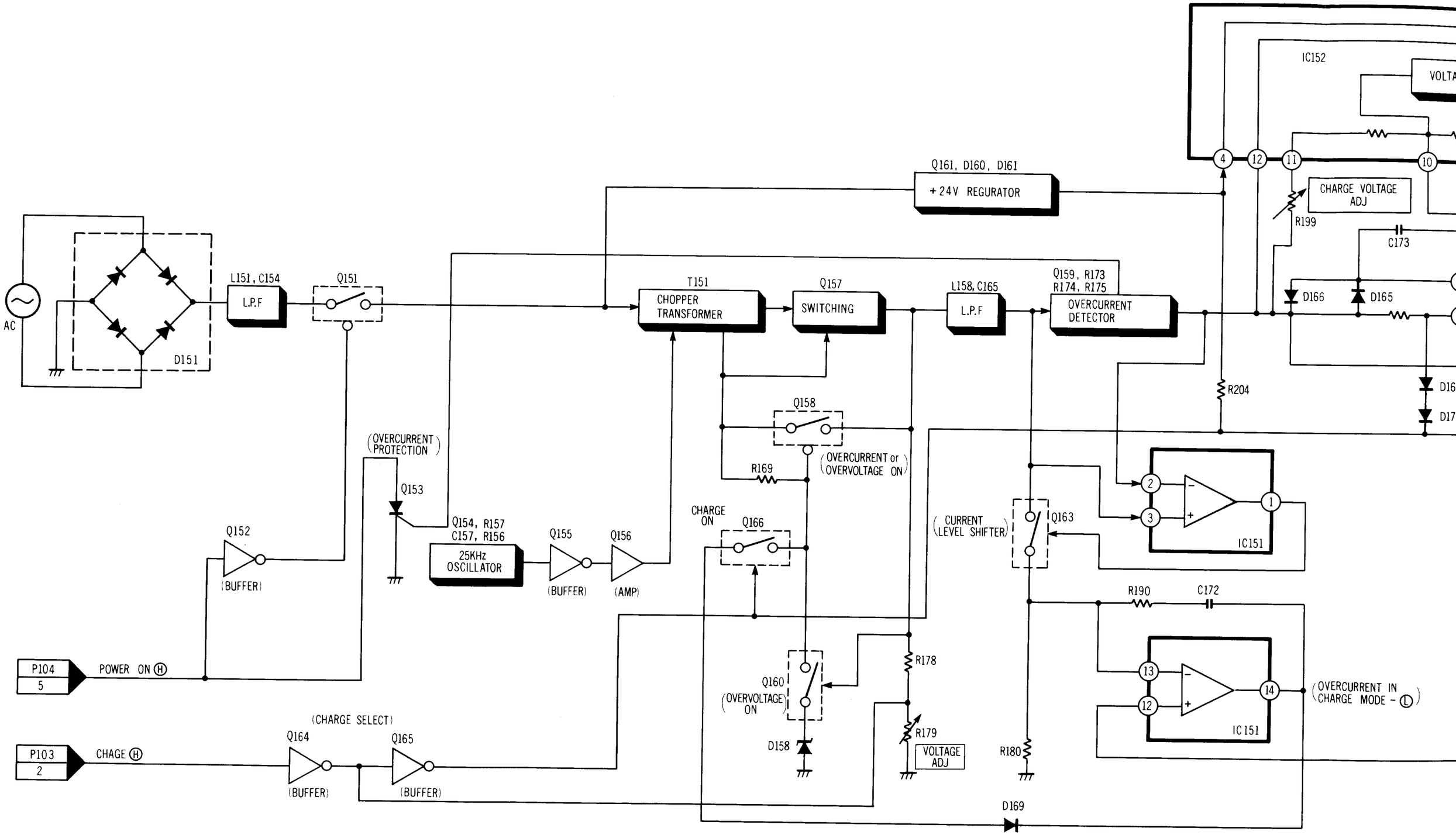

CK DIAGRAM

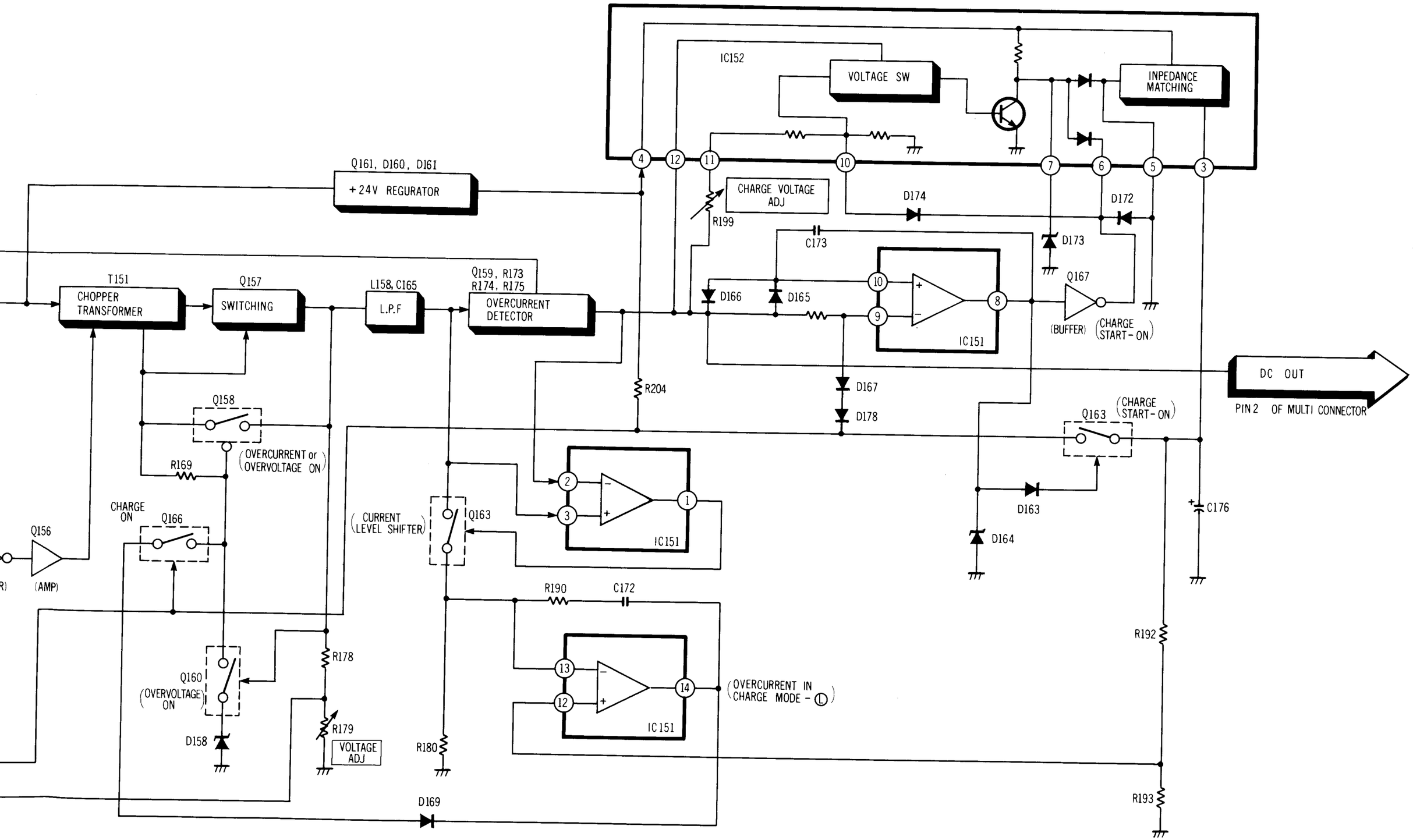
IC152
VOLTAGE SW
INPEDANCE MATCHING
Q161, D160, D161
+24V REGURATOR
CHARGE VOLTAGE ADJ
R199
D174
D172
C173
D173
T151
CHOPPER TRANSFORMER
Q157
SWITCHING
L158, C165
L.P.F
Q159, R173 R174, R175
OVERCURRENT DETECTOR
D166
D165
IC151
Q167
(BUFFER)
(CHARGE START-ON)
DC OUT
PIN 2 OF MULTI CONNECTOR
R204
D167
D178
Q158
(OVERCURRENT or OVERVOLTAGE ON)
R169
Q163
(CHARGE START-ON)
D163
D164
C176
CHARGE ON
Q166
Q156
(AMP)
(CURRENT LEVEL SHIFTER)
Q163
IC151
R190
C172
R192
R178
Q160
(OVERVOLTAGE ON)
R179
VOLTAGE ADJ
D158
R180
IC151
(OVERCURRENT IN CHARGE MODE - Ⓛ)
D169
R193

TV DEMODULATOR BLOCK DIAGRAM (NV-V10E/EO)

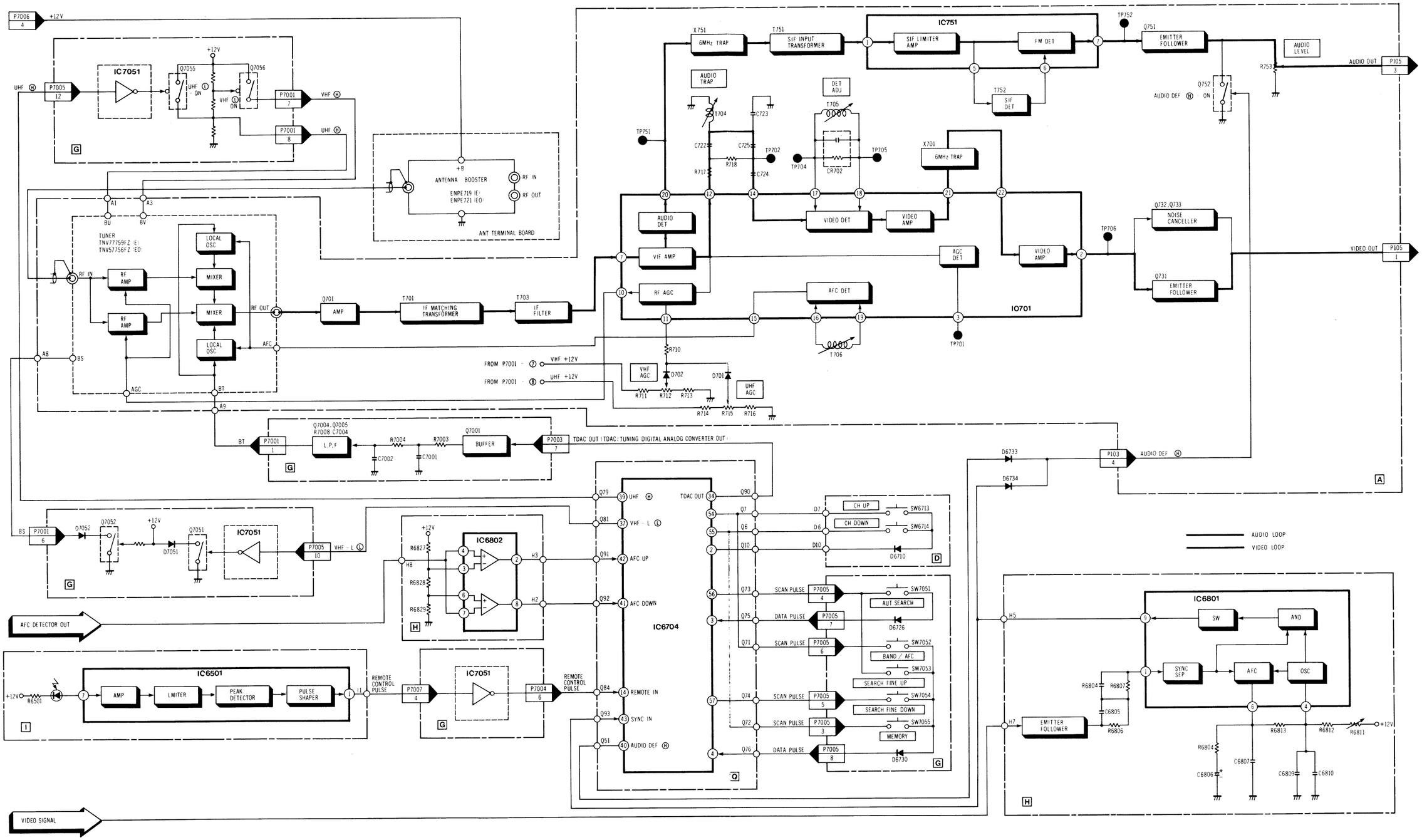

TV DEMODULATOR BLOCK DIAGRAM (NV-V10B)

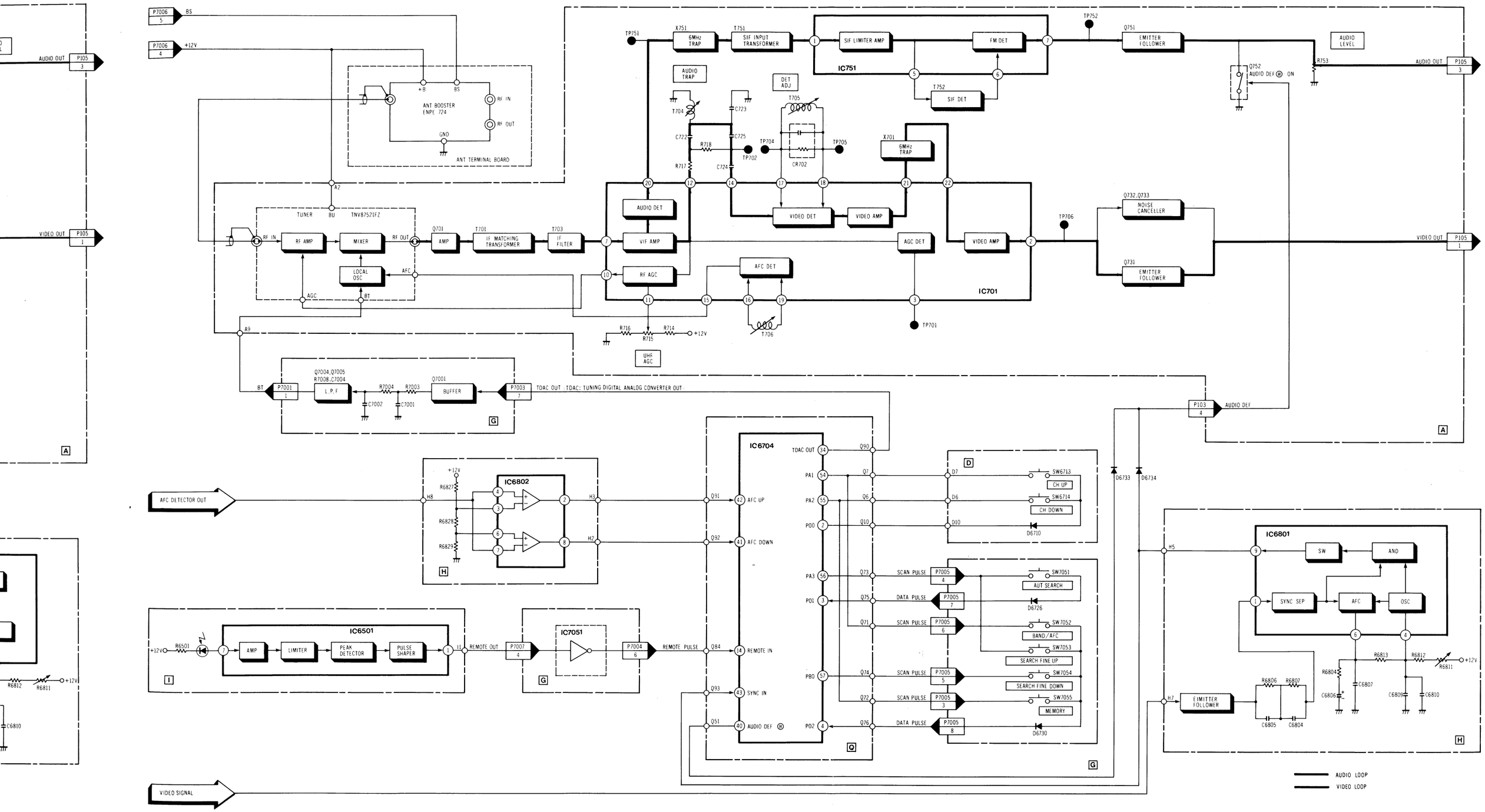

TIMER BOARD (NV-V10E/EO; VEP4051A)

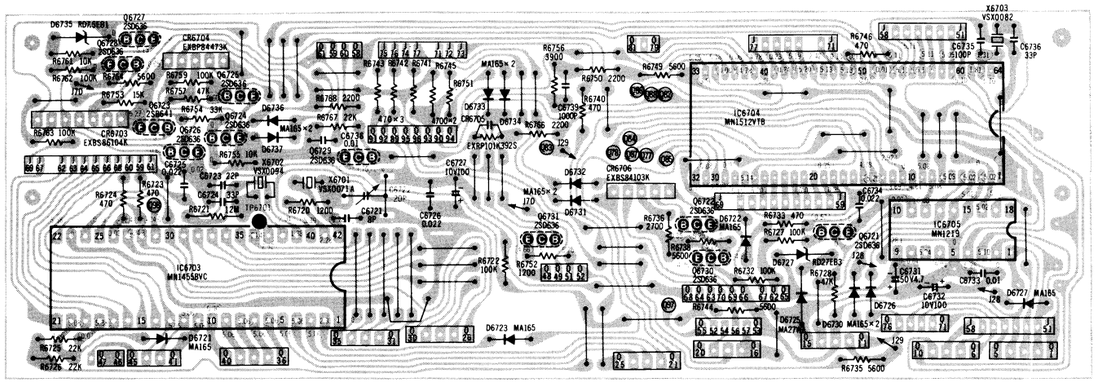

CONNECTION TO SWITCH SECTION

Q62	P6703-3
Q63	P6703-8
Q64	P6703-7
Q65	P6703-6
Q66	P6703-5
Q67	P6703-4
Q68	P6703-10
Q69	P6703-1
Q70	P6703-2

CONNECTION TO SELECTOR SECTION

Q71	P7005-6
Q72	P7005-3
Q73	P7005-4
Q74	P7005-5
Q75	P7005-7
Q76	P7005-8
Q77	P7005-1
Q78	P7005-2
Q79	P7005-12
Q80	P7005-11

Q81	P7005-10
Q82	P7005-9
Q83	P7004-5
Q84	P7004-6
Q85	P7004-3
Q86	P7004-1
Q87	P7004-2
Q88	P7004-4
Q89	P7003-1
Q90	P7003-7

Q91	P7003-3
Q92	P7003-4
Q93	P7003-6
Q94	P7003-5
Q95	P7003-2
Q96	P7003-8

CONNECTION TO TV DEMODULATOR SECTION

Q46	Ⓔ	P102-2
Q47	Ⓒ	P102-1
Q48	GND	P103-1
Q49	CHARGE Ⓑ	P103-2
Q50	CHARGE LED	P103-3
Q51	SOUND DEF	P103-4
Q52	+5V BACK-UP	P104-1
Q53	+5V	P104-2
Q54	+12V	P104-3
Q55	+45V (VPP)	P104-4

Q56	POWER ON Ⓑ	P104-5
Q57	GND	P104-8
Q58	SI	P6701-2
Q59	SAFETY TAB	P6701-4
Q60	SO	P6701-1
Q61	CH LOCK Ⓑ	P6701-3

CONNECTION TO TIMER DISPLAY SECTION

FROM Q1~Q19 TO D1~D19
FROM Q20~Q45 TO D20~D45
FROM Q57 TO D46

Timer	
Q6721	B-4
Q6722	B-4
Q6723	C-1
Q6724	B-2
Q6725	C-2
Q6726	B-2
Q6727	C-1
Q6728	C-1
Q6729	B-2
Q6730	B-4
Q6731	B-3
IC6703	B-2
IC6704	C-4
IC6705	B-5

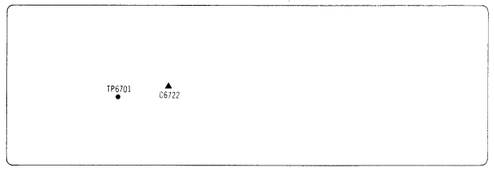

SELECTOR BOARD (NV-V10E/EO; VEP

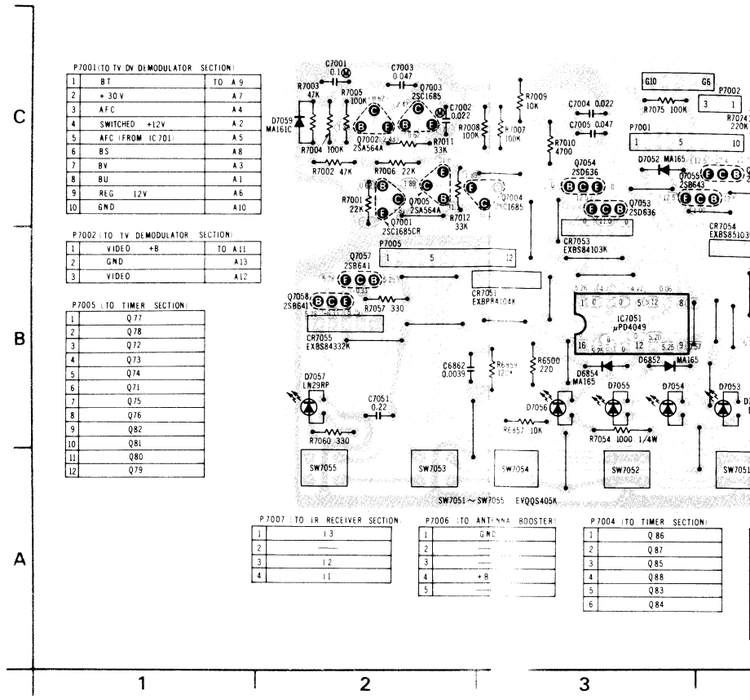

P7001 (TO TV DV DEMODULATOR SECTION)

1	BT	TO A9
2	+30V	A7
3	AFC	A4
4	SWITCHED +12V	A2
5	AFC (FROM IC701)	A5
6	BS	A8
7	BV	A3
8	BU	A1
9	REG 12V	A6
10	GND	A10

P7002 (TO TV DEMODULATOR SECTION)

1	VIDEO +B	TO A11
2	GND	A13
3	VIDEO	A12

P7005 (TO TIMER SECTION)

1	Q77
2	Q78
3	Q72
4	Q73
5	Q74
6	Q71
7	Q75
8	Q76
9	Q82
10	Q81
11	Q80
12	Q79

P7007 (TO IR RECEIVER SECTION)

1	I3
2	—
3	I2
4	I1

P7006 (TO ANTENNA BOOSTER)

1	GND
2	—
3	—
4	+B
5	—

P7004 (TO TIMER SECTION)

1	Q86
2	Q87
3	Q85
4	Q88
5	Q83
6	Q84

TIMER DISPLAY BOARD (VEP4052A)

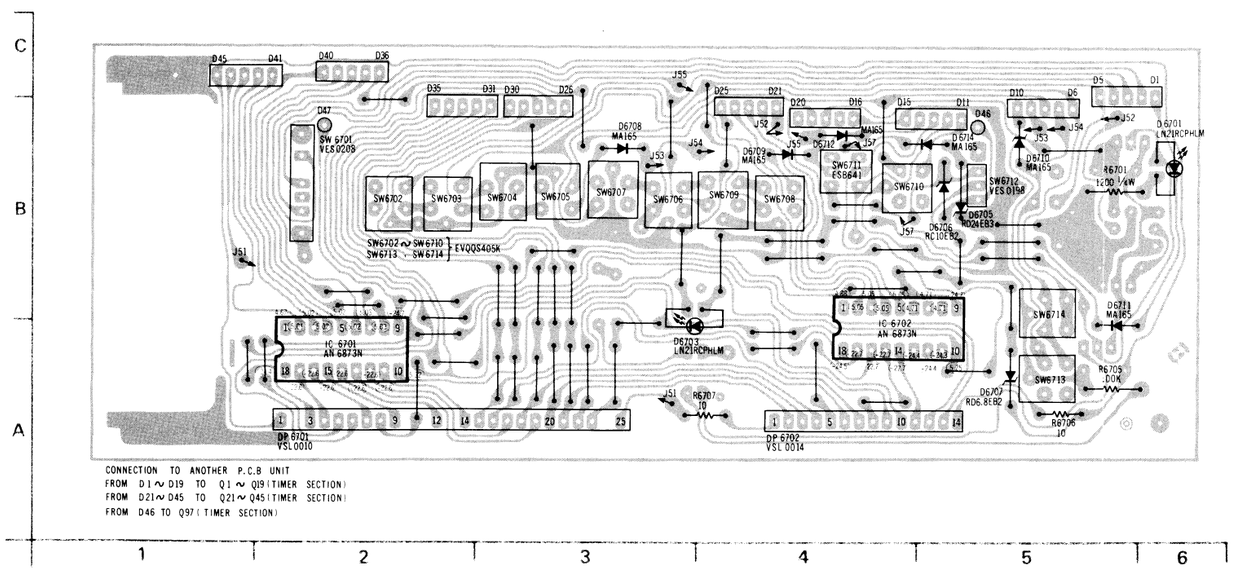

CONNECTION TO ANOTHER P.C.B UNIT
FROM D1~D19 TO Q1~Q19 (TIMER SECTION)
FROM D21~D45 TO Q21~Q45 (TIMER SECTION)
FROM D46 TO Q97 (TIMER SECTION)

SWITCH BOARD (VEP4047A) SELECT

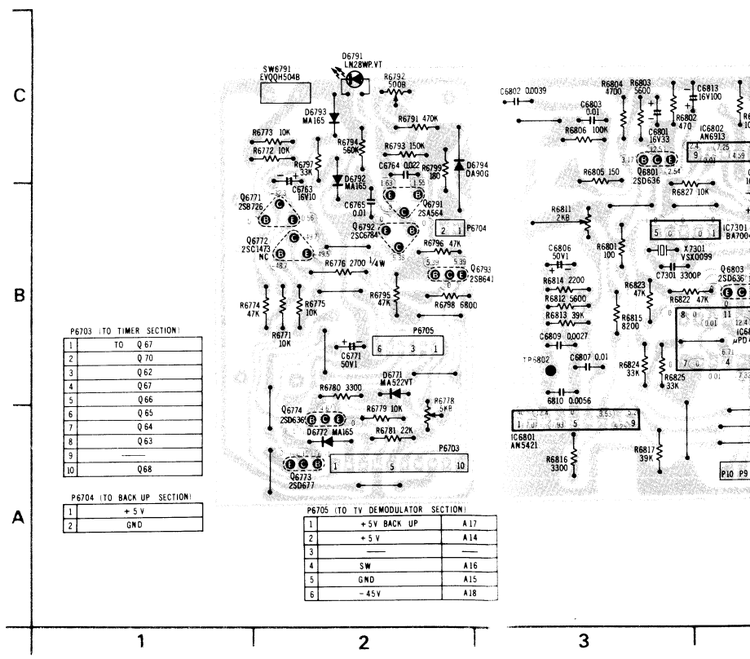

P6703 (TO TIMER SECTION)

1	TO Q67
2	Q70
3	Q62
4	Q67
5	Q66
6	Q65
7	Q64
8	Q63
9	—
10	Q68

P6704 (TO BACK UP SECTION)

1	+5V
2	GND

P6705 (TO TV DEMODULATOR SECTION)

1	+5V BACK UP	A17
2	+5V	A14
3	—	—
4	SW	A16
5	GND	A15
6	-45V	A18

RD (NV-V10E/EO; VEP4050A)

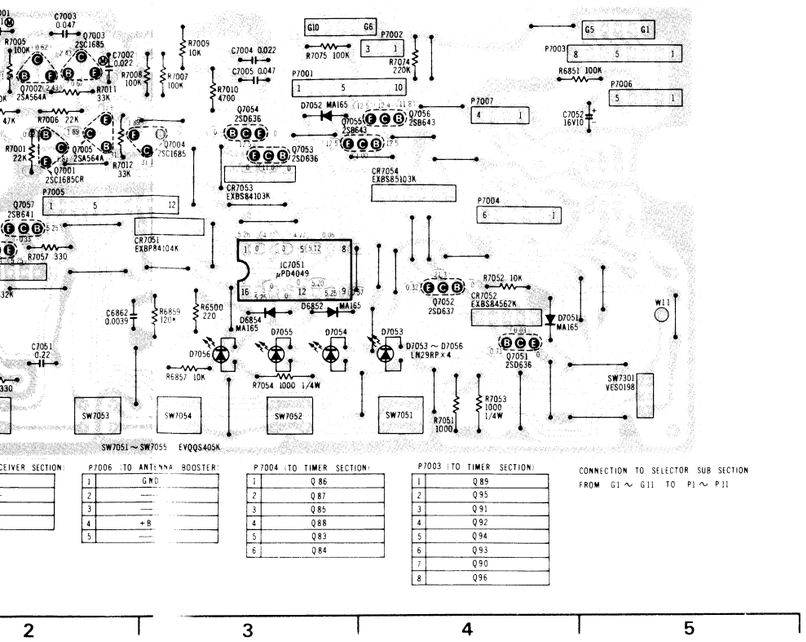

Selector P.C.B	
Q7001	C-2
Q7002	C-2
Q7003	C-2
Q7004	C-3
Q7005	C-2
Q7051	B-4
Q7052	B-4
Q7053	C-3
Q7054	C-3
Q7055	C-3
Q7056	C-4
Q7057	B-2
Q7058	B-2
IC7051	B-3

IR RECEIVER BOARD (VEP4053A)

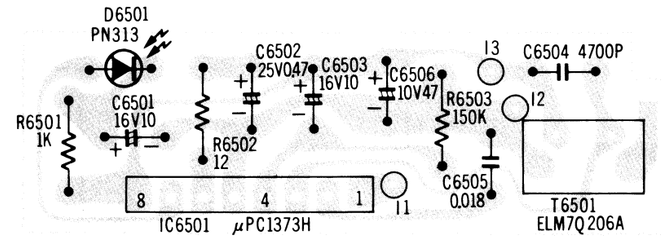

I1	P7007-4
I2	P7007-3
I3	P7007-1

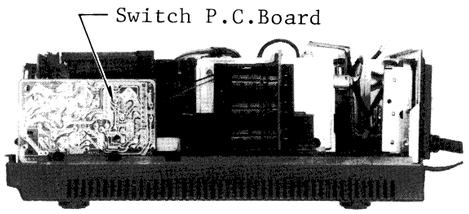

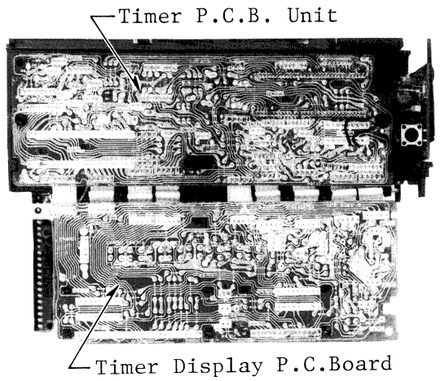

BACK UP BOARD (VEP4049A)

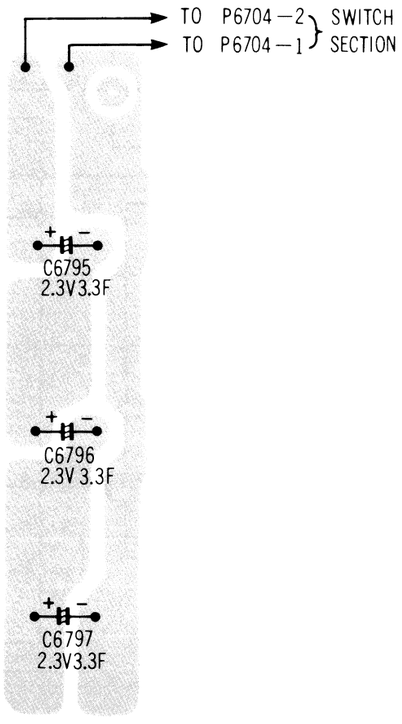

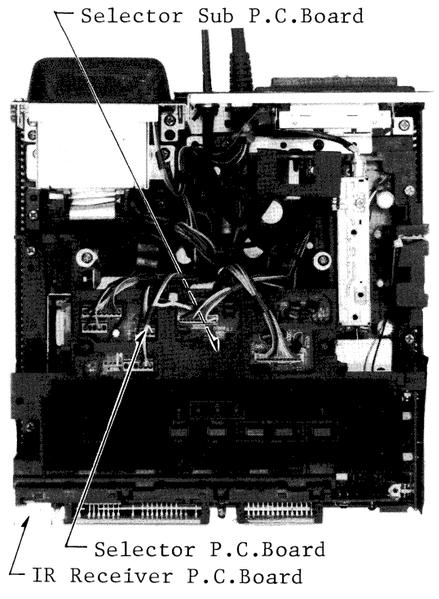

(VEP4047A) SELECTOR SUB BOARD (VEP4048A)

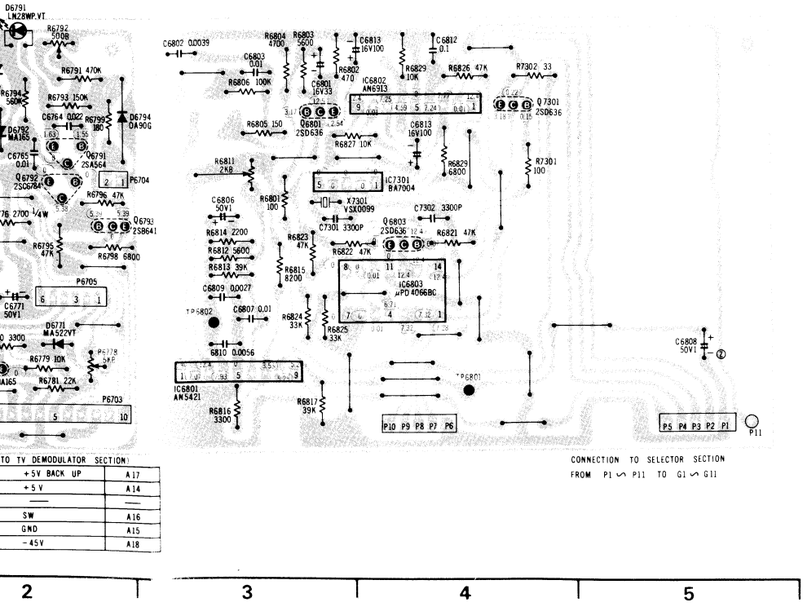

Switch Selector Sub	
Q6771	B-2
Q6772	B-2
Q6773	A-2
Q6774	A-2
Q6791	B-2
Q6792	B-2
Q6793	B-2
Q6801	C-3
Q6803	B-4
Q7301	C-4
IC6801	A-3
IC6802	C-4
IC6803	B-4
IC7301	B-4

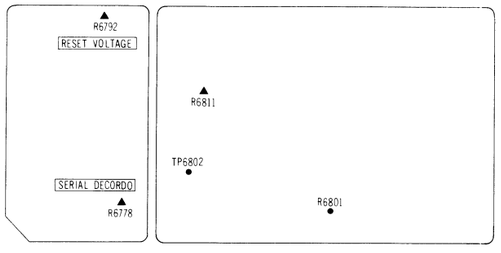

PROGRAMMABLE TIMER SCHEMATIC DIAGRAM (TIMER, TIMER DISPLAY, SWITCH, SELECTOR, SELECTOR SUB, IR RECEIVER BACK UP)

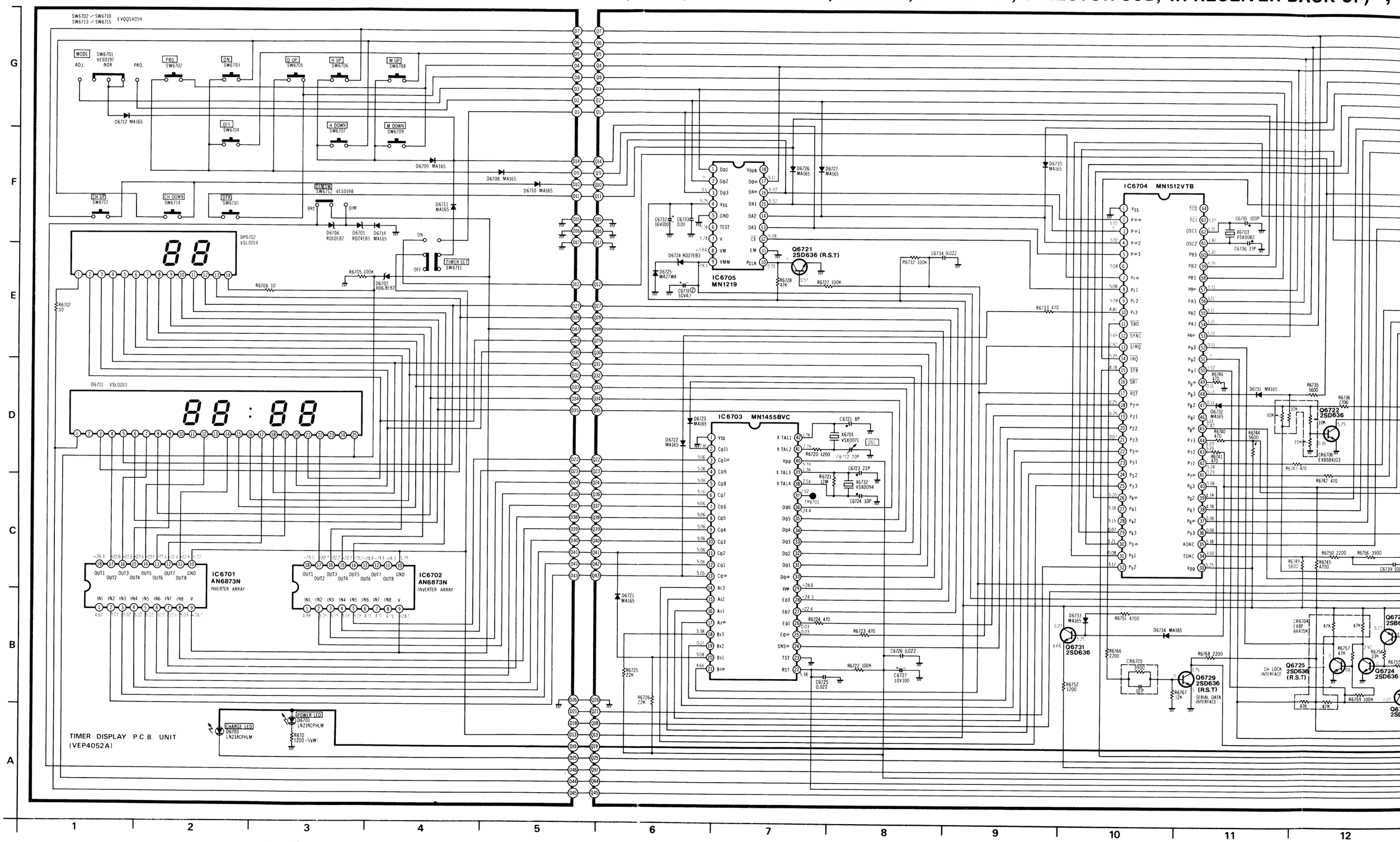

(TIMER, TIMER DISPLAY, SWITCH, SELECTOR, SELECTOR SUB, IR RECEIVER BACK UP) ; NV-V10E/EO

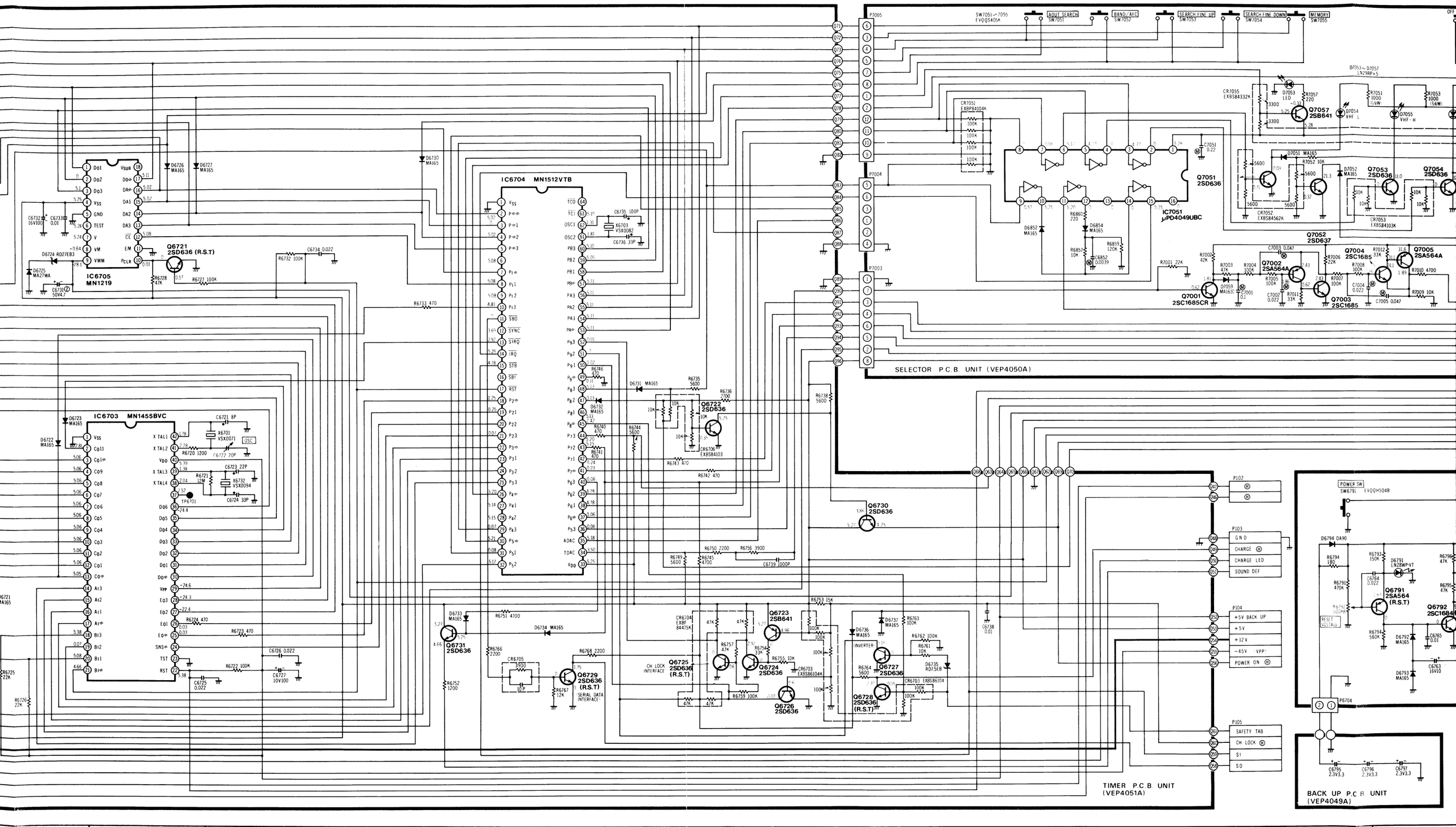

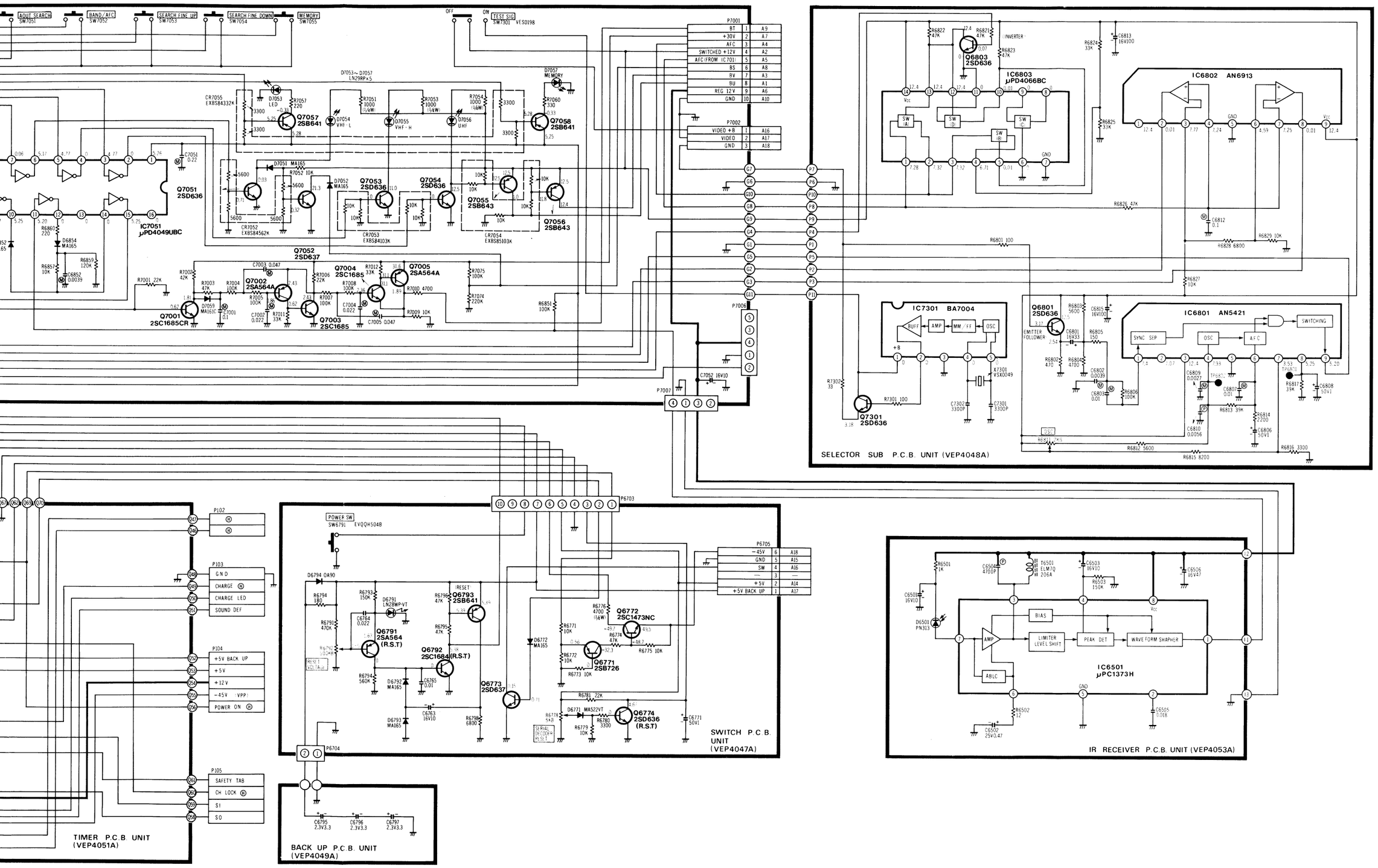

Timer	
Q6721	E-7
Q6722	D-12
Q6723	C-12
Q6724	B-12
Q6725	B-12
Q6726	B-12
Q6727	B-13
Q6728	B-13
Q6729	B-11
Q6730	C-13
Q6731	B-10
IC6703	D-7
IC6704	F-10
IC6705	E-7

Timer Display	
IC6701	C-2
IC6702	C-4

Selector	
Q7001	E-16
Q7002	E-17
Q7003	E-17
Q7004	E-18
Q7005	E-18
Q7051	F-17
Q7052	F-17
Q7053	F-18
Q7054	F-18
Q7055	F-19
Q7056	F-19
Q7057	G-17
Q7058	G-19

Selector Sub	
Q6801	E-23
Q6803	G-22
Q7301	D-22
IC6801	E-24
IC6802	G-24
IC6803	G-23
IC7301	E-22

Switch	
Q6771	B-19
Q6772	C-20
Q6773	B-19
Q6774	B-20
Q6791	B-18
Q6792	B-18
Q6793	C-18

IR Receiver	
IC6501	B-24

PROGRAMMABLE TIMER SCHEMATIC DIAGRAM (TIMER, TIMER DISPLAY, SWITCH, SELECTOR SUB, IR RECEIVER, BACK UP) ; NV-V10B

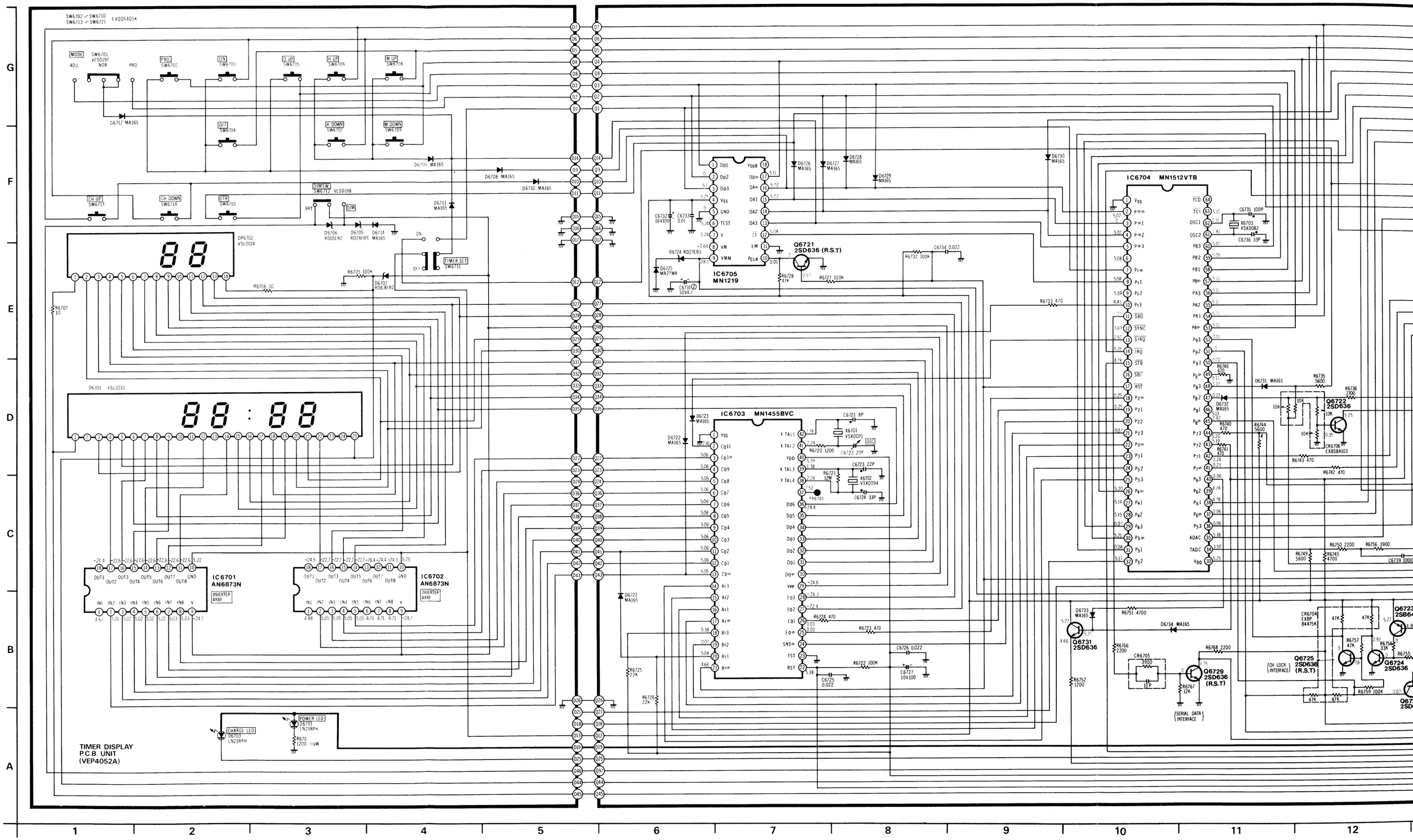

SELECTOR SUB, IR RECEIVER, BACK UP) ; NV-V10B

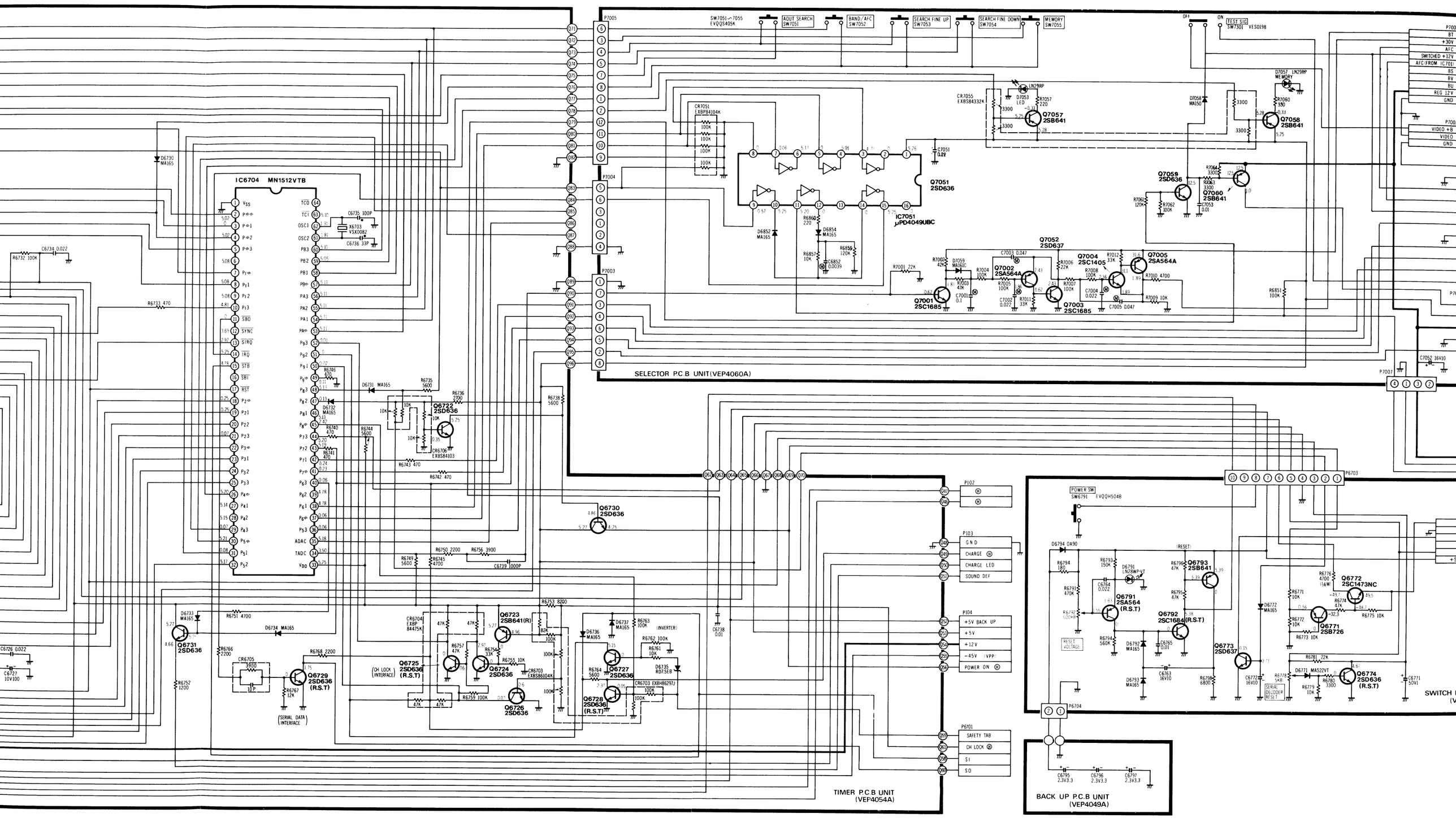

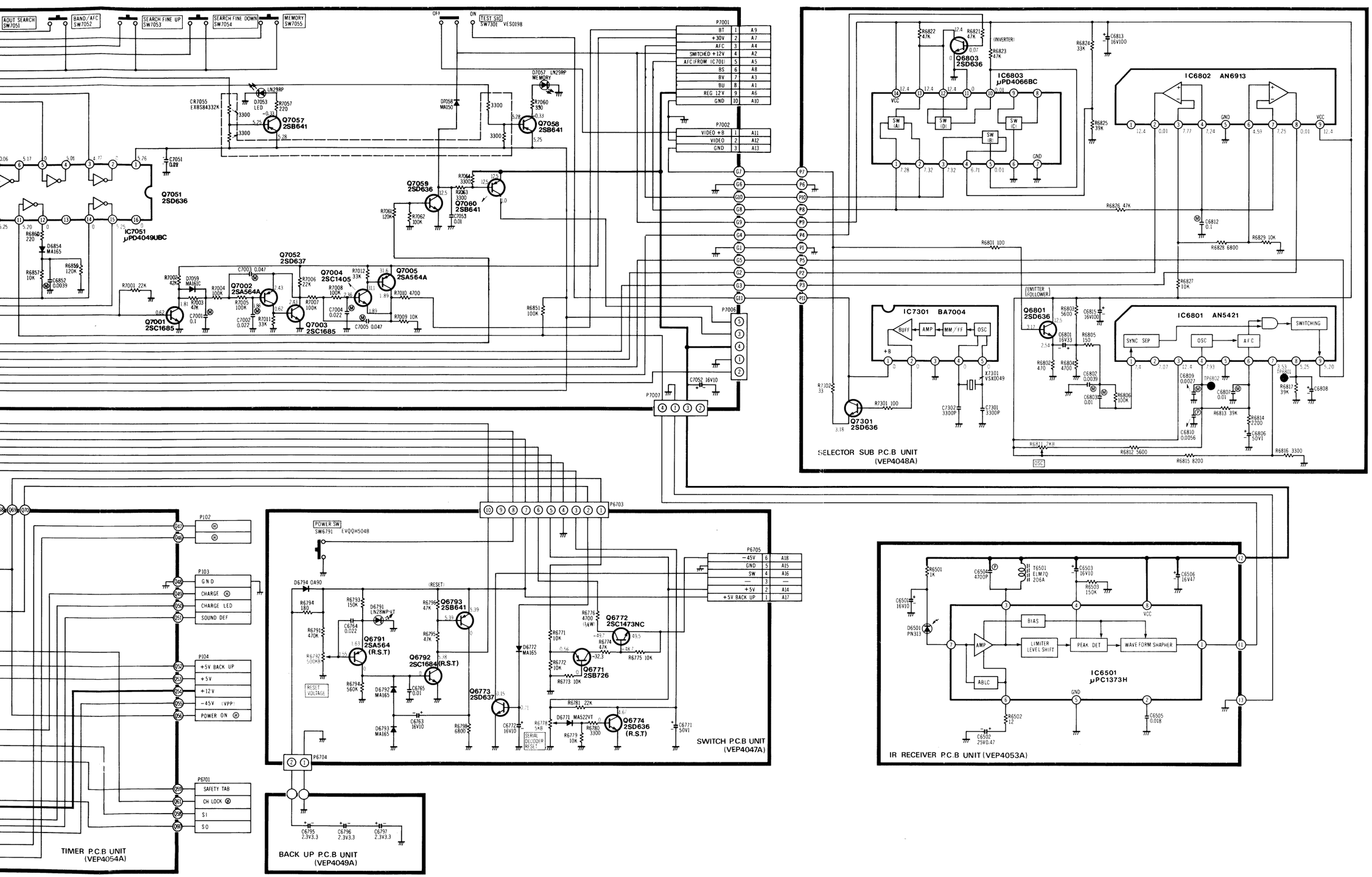

Timer	
Q6721	E-7
Q6722	D-12
Q6723	C-12
Q6724	B-12
Q6725	B-12
Q6726	B-12
Q6727	B-13
Q6728	B-13
Q6729	B-11
Q6730	C-13
Q6731	B-10
IC6703	D-7
IC6704	F-10
IC6705	E-7

Timer Display	
IC6701	C-2
IC6702	C-4

Selector	
Q7001	E-16
Q7002	E-17
Q7003	E-17
Q7004	E-18
Q7005	E-18
Q7057	G-17
Q7058	G-19
Q7059	F-18
Q7060	F-19

Selector Sub	
Q6801	E-23
Q6803	G-22
Q7301	D-22
IC6801	E-24
IC6802	G-24
IC6803	G-23
IC7301	E-22

Switch	
Q6771	B-19
Q6772	C-20
Q6773	B-19
Q6774	B-20
Q6791	B-18
Q6792	B-18
Q6793	C-18

IR Receiver	
IC6501	B-24

TIMER BOARD (NV-V10B; VEP4054A)

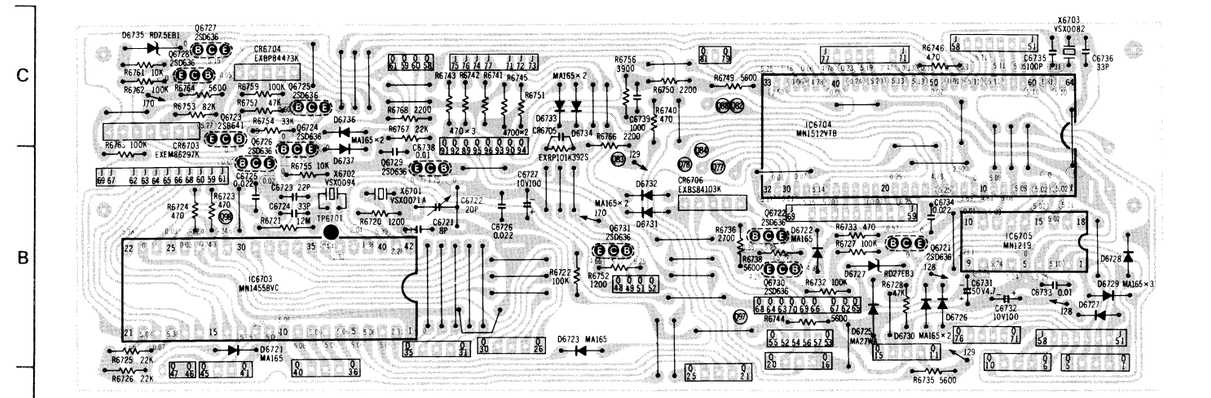

CONNECTION TO SWITCH SECTION

Q62	P6703-3
Q63	P6703-8
Q64	P6703-7
Q65	P6703-6
Q66	P6703-5
Q67	P6703-4
Q68	P6703-10
Q69	P6703-1
Q70	P6703-2

CONNECTION TO SELECTOR SECTION

Q71	P7005-6
Q72	P7005-3
Q73	P7005-4
Q74	P7005-5
Q75	P7005-7
Q76	P7005-8
Q77	P7005-1
Q78	P7005-2
Q79	P7005-12
Q80	P7005-11

Q81	P7005-10
Q82	P7005-9
Q83	P7004-5
Q84	P7004-6
Q85	P7004-3
Q86	P7004-1
Q87	P7004-2
Q88	P7004-4
Q89	P7003-1
Q90	P7003-7

Q91	P7003-3
Q92	P7003-4
Q93	P7003-6
Q94	P7003-5
Q95	P7003-2
Q96	P7003-8

CONNECTION TO TV DEMODULATOR SECTION

Q46	Ⓔ	P102-2
Q47	Ⓔ	P102-1
Q48	G N D	P103-1
Q49	CHARGE Ⓔ	P103-2
Q50	CHARGE LED	P103-3
Q51	SOUND DEF	P103-4
Q52	+5V BACK-UP	P104-1
Q53	+5V	P104-2
Q54	+12V	P104-3
Q55	+45V (VPP)	P104-4

Q56	POWER ON Ⓔ	P104-5
Q57	G N D	P104-8
Q58	S I	P6701-2
Q59	SAFETY TAB	P6701-4
Q60	SO	P6701-1
Q61	CH LOCK Ⓔ	P6701-3

CONNECTION TO TIMER DISPLAY SECTION

FROM Q1~Q19 TO D1~D19
FROM Q20~Q45 TO D20~D45
FROM Q97 TO D46

Timer	
Q6721	B-4
Q6722	B-4
Q6723	C-1
Q6724	B-2
Q6725	C-2
Q6726	B-2
Q6727	C-1
Q6728	C-1
Q6729	B-2
Q6730	B-4
Q6731	B-3
IC6703	B-2
IC6704	C-4
IC6705	B-5

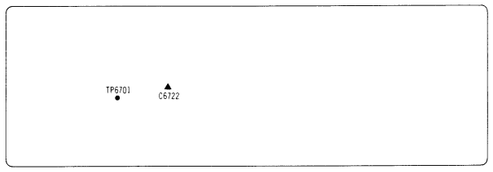

TIMER DISPLAY BOARD (VEP4052A)

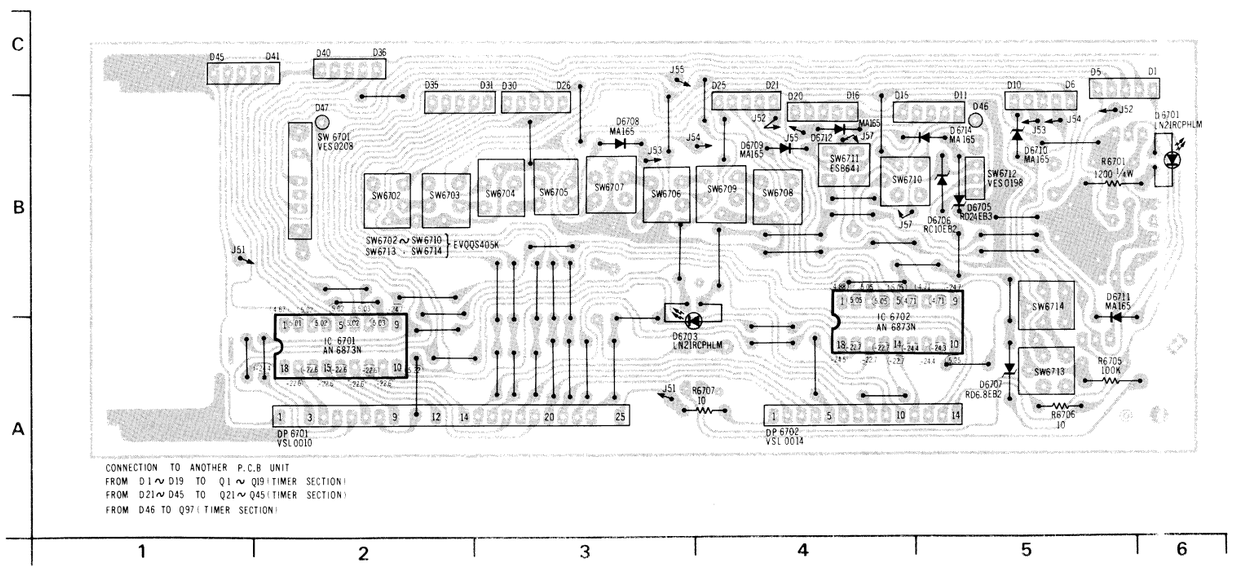

CONNECTION TO ANOTHER P.C.B UNIT
FROM D1~D19 TO Q1~Q19 (TIMER SECTION)
FROM D21~D45 TO Q21~Q45 (TIMER SECTION)
FROM D46 TO Q97 (TIMER SECTION)

SELECTOR BOARD (NV-V10B; VEP40

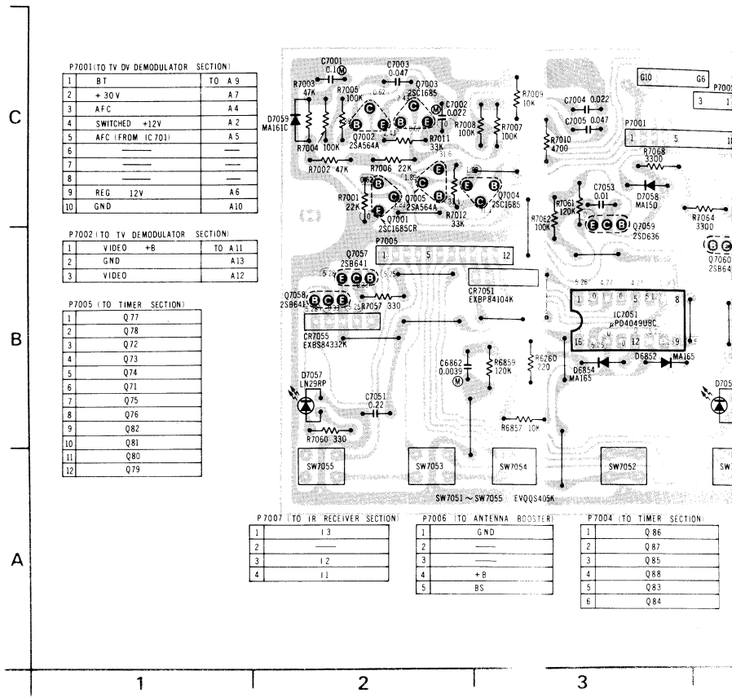

P7001 (TO TV DV DEMODULATOR SECTION)

1	B T	TO A 9
2	+ 30 V	A 7
3	A F C	A 4
4	SWITCHED +12V	A 2
5	AFC (FROM IC701)	A 5
6	——	——
7	——	——
8	——	——
9	REG 12V	A 6
10	G N D	A 10

P7002 (TO TV DEMODULATOR SECTION)

1	V I D E O +B	TO A 11
2	G N D	A 13
3	V I D E O	A 12

P7005 (TO TIMER SECTION)

1	Q 77
2	Q 78
3	Q 72
4	Q 73
5	Q 74
6	Q 71
7	Q 75
8	Q 76
9	Q 82
10	Q 81
11	Q 80
12	Q 79

P7007 (TO IR RECEIVER SECTION)

1	I 3
2	——
3	I 2
4	I 1

P7006 (TO ANTENNA BOOSTER)

1	G N D
2	——
3	——
4	+ B
5	B S

P7004 (TO TIMER SECTION)

1	Q 86
2	Q 87
3	Q 85
4	Q 88
5	Q 83
6	Q 84

SWITCH BOARD (VEP4047A) SELECT

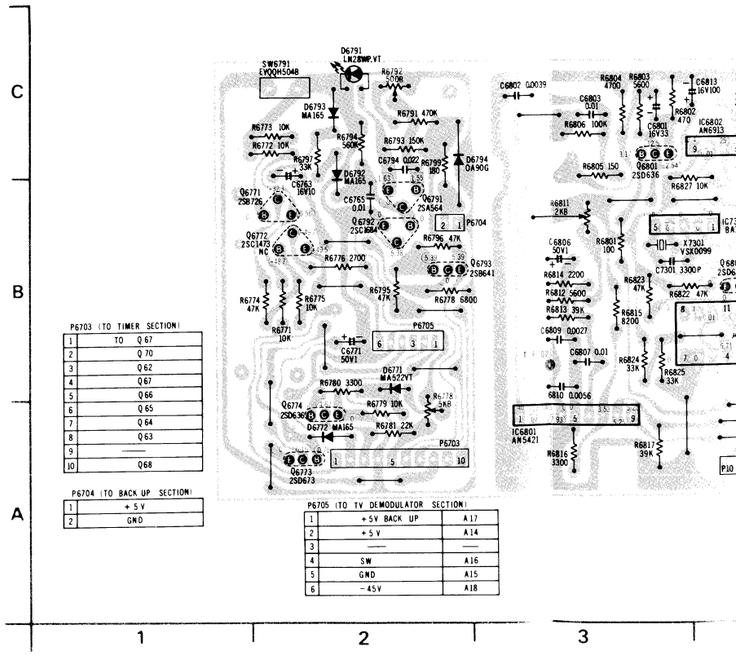

P6703 (TO TIMER SECTION)

1	TO Q 67
2	Q 70
3	Q 62
4	Q 67
5	Q 66
6	Q 65
7	Q 64
8	Q 63
9	——
10	Q 68

P6704 (TO BACK UP SECTION)

1	+ 5 V
2	G N D

P6705 (TO TV DEMODULATOR SECTION)

1	+ 5 V BACK UP	A 17
2	+ 5 V	A 14
3	——	——
4	S W	A 16
5	G N D	A 15
6	− 45 V	A 18

ARD (NV-V10B; VEP4060B)

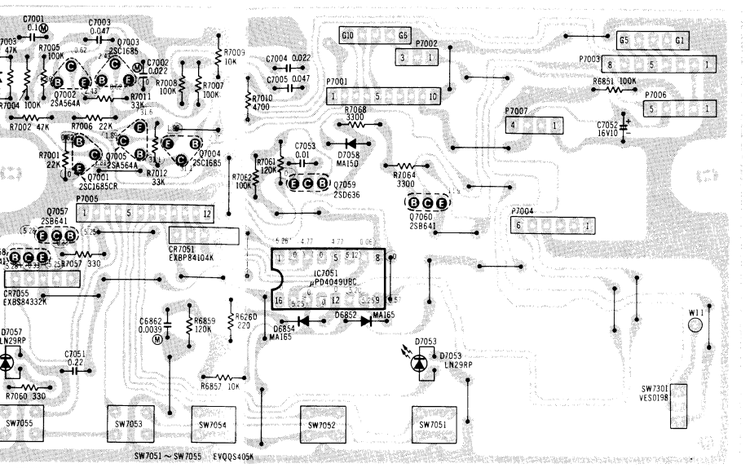

Selector P.C.B	
Q7001	C-2
Q7002	C-2
Q7003	C-2
Q7004	C-3
Q7005	C-2
Q7057	B-2
Q7058	B-2
Q7059	B-4
Q7060	B-4
IC7051	B-3

SW7051 ~ SW7055 EVQQS405A

IR RECEIVER SECTION

I3	
I2	
I1	

P7006 (TO ANTENNA BOOSTER)

1	GND
2	—
3	—
4	+B
5	BS

P7004 (TO TIMER SECTION)

1	Q86
2	Q87
3	Q85
4	Q88
5	Q83
6	Q84

P7003 (TO TIMER SECTION)

1	Q89
2	Q95
3	Q91
4	Q92
5	Q94
6	Q93
7	Q90
8	Q96

CONNECTION TO SELECTOR SUB SECTION FROM G1 ~ G11 TO P1 ~ P11

2 3 4 5

D (VEP4047A) SELECTOR SUB BOARD (VEP4048A)

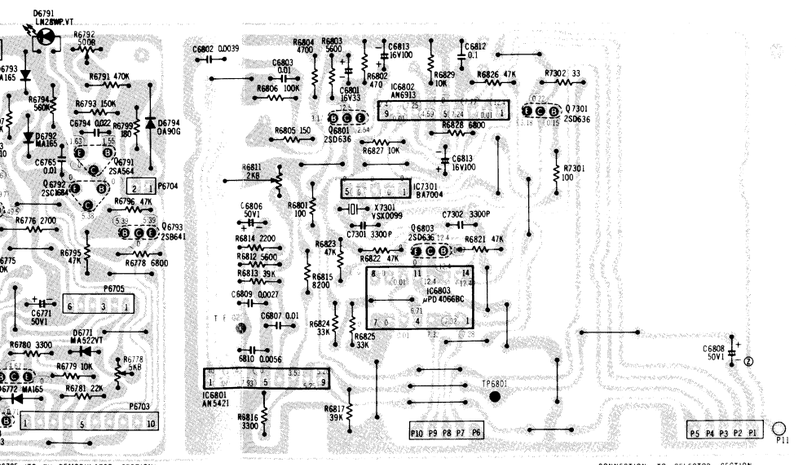

Switch, Selector Sub	
Q6771	B-2
Q6772	B-2
Q6773	A-2
Q6774	A-2
Q6791	B-2
Q6792	B-2
Q6793	B-2
Q6801	C-3
Q6803	B-4
Q7301	C-4
IC6801	A-3
IC6802	C-4
IC6803	B-4
IC7301	B-4

P6705 (TO TV DEMODULATOR SECTION)

1	+5V BACK UP	A17
2	+5V	A14
3	—	—
4	SW	A16
5	GND	A15
6	−45V	A18

CONNECTION TO SELECTOR SECTION FROM P1 ~ P11 TO G1 ~ G11

2 3 4 5

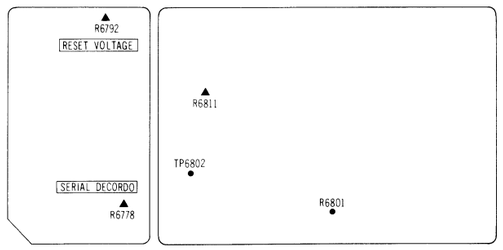

IR RECEIVER BOARD (VEP4053A)

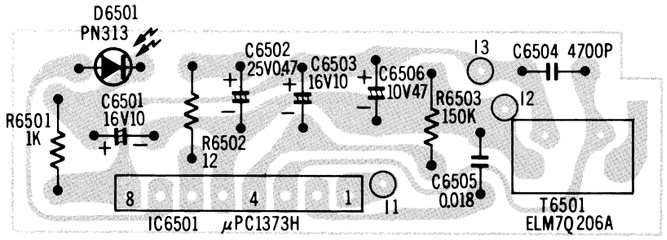

I1	P7007-4
I2	P7007-3
I3	P7007-1

BACK UP BOARD (VEP4049A)

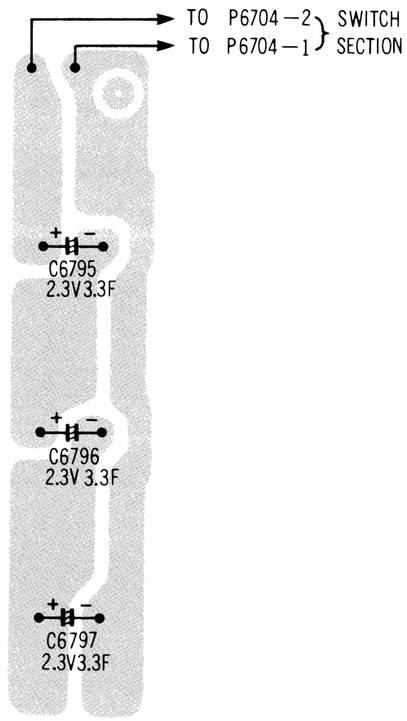

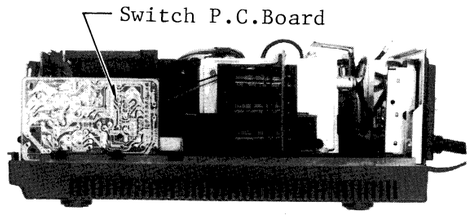

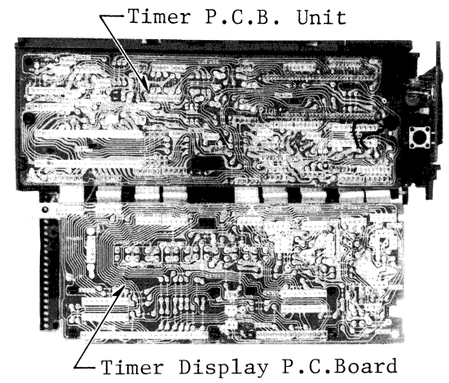

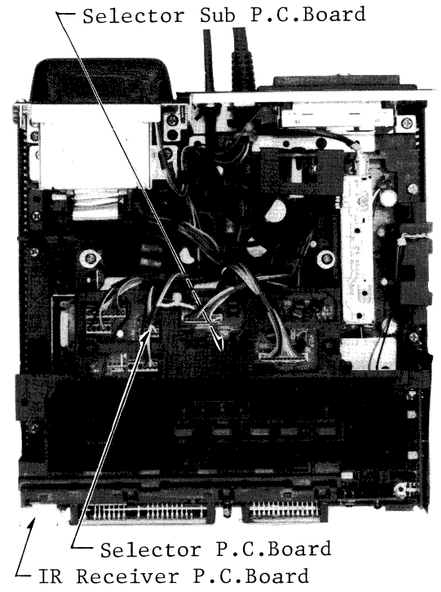

TV DEMODULATOR SCHEMATIC DIAGRAM (TV DEMODULATOR, POWER SUPPLY SUB, FUSE, ANTENNA BOOSTER) ; NV-V10E/EO

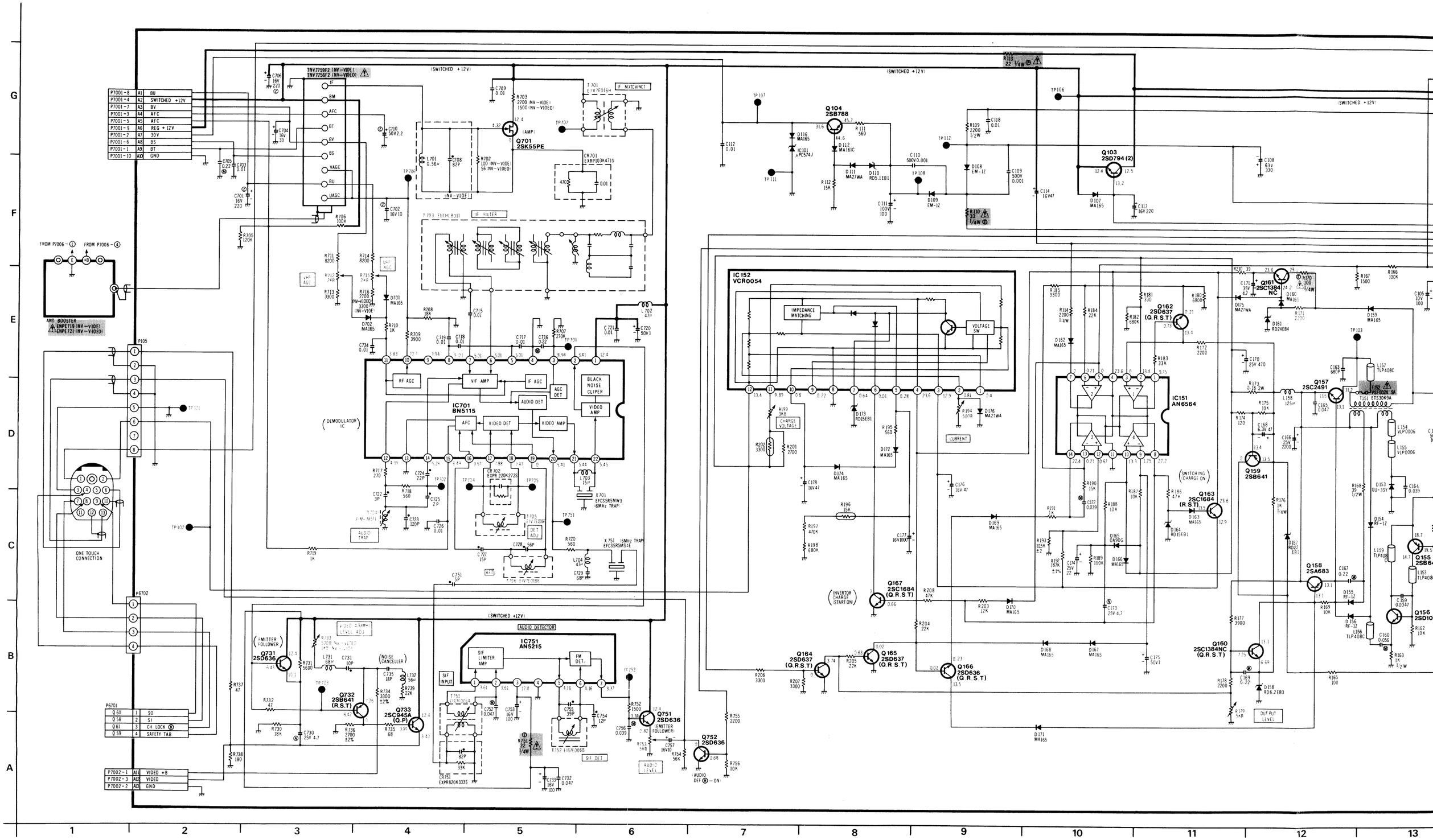

DEMODULATOR, POWER SUPPLY SUB, FUSE, ANTENNA BOOSTER) ; NV-V10E/EO

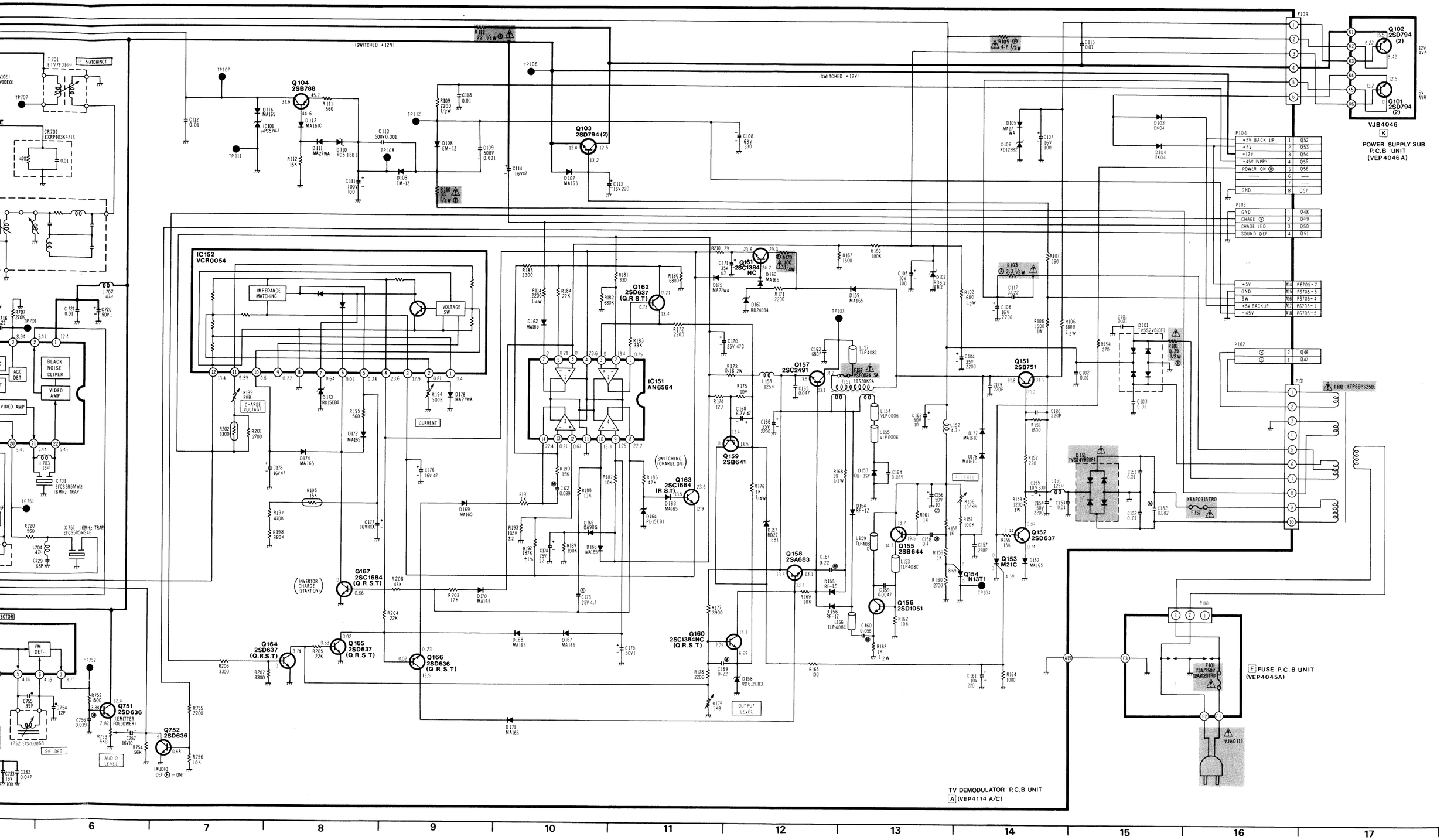

POWER SUPPLY SUB BOARD (VEP4046A)

TV Demodulator	
Q101	G-17
Q102	G-17
Q103	F-10
Q104	G-8
Q151	E-14
Q152	C-14
Q153	C-14
Q154	C-14
Q155	C-13
Q156	C-13
Q157	D-12
Q158	C-12
Q159	D-12
Q160	B-12
Q161	E-12
Q162	E-11
Q163	C-11
Q164	B-8
Q165	B-8
Q166	B-9
Q167	C-8
Q701	G-5
Q731	B-3
Q732	B-4
Q733	A-4
Q751	A-6
Q752	A-7
IC101	G-7
IC151	D-10
IC152	E-8
IC701	D-5
IC751	B-5

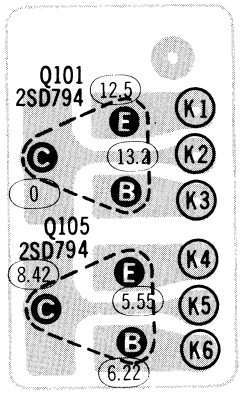

CONNECTION TO TV DEMODULATOR SECTION

K1	P109 — 4
K2	P109 — 2
K3	P109 — 1
K4	P109 — 6
K5	P109 — 5
K6	P109 — 3

Demodu	
Q103	A-5
Q104	B-4
Q151	C-2
Q152	C-3
Q153	C-3
Q154	E-2
Q155	E-2
Q156	D-2
Q157	D-2
Q158	D-2
Q159	D-3
Q160	D-3
Q161	C-3
Q162	C-4
Q163	B-5
Q164	C-4
Q165	C-4
Q166	B-5
Q167	C-5
Q701	D-6
Q730	E-5
Q732	E-5
Q733	E-4
Q751	E-4
Q752	E-3
IC101	B-4
IC151	C-5
IC701	D-5

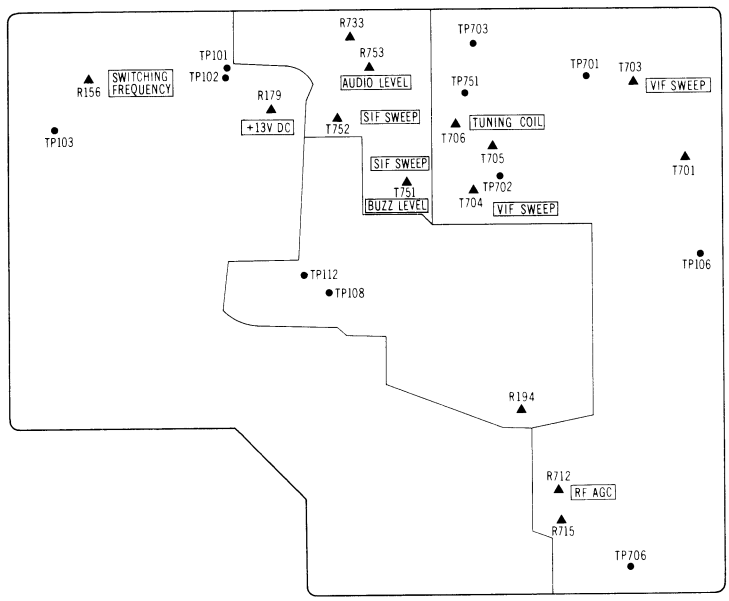

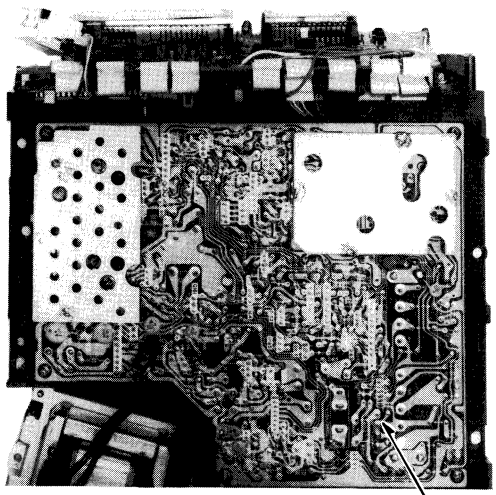

TV Demodulator P.C.Board

Power Supply Sub P.C.Board

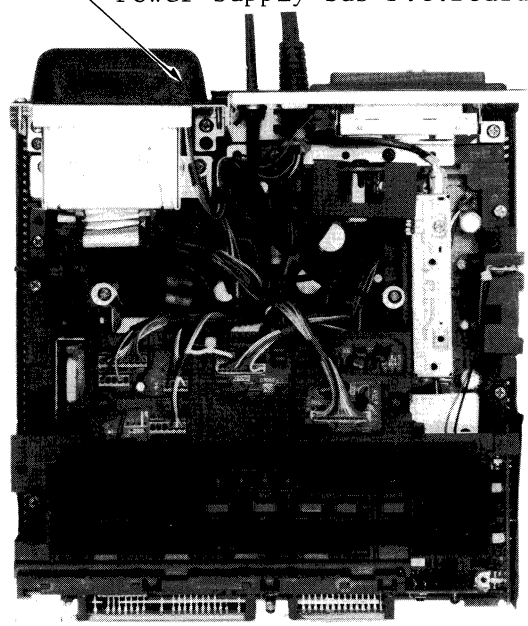

TV DEMODULATOR BOARD (NV-V10E; VEP4114A) (NV-V10EO; VEP4114C) FUSE BOARD (VEP4045A)

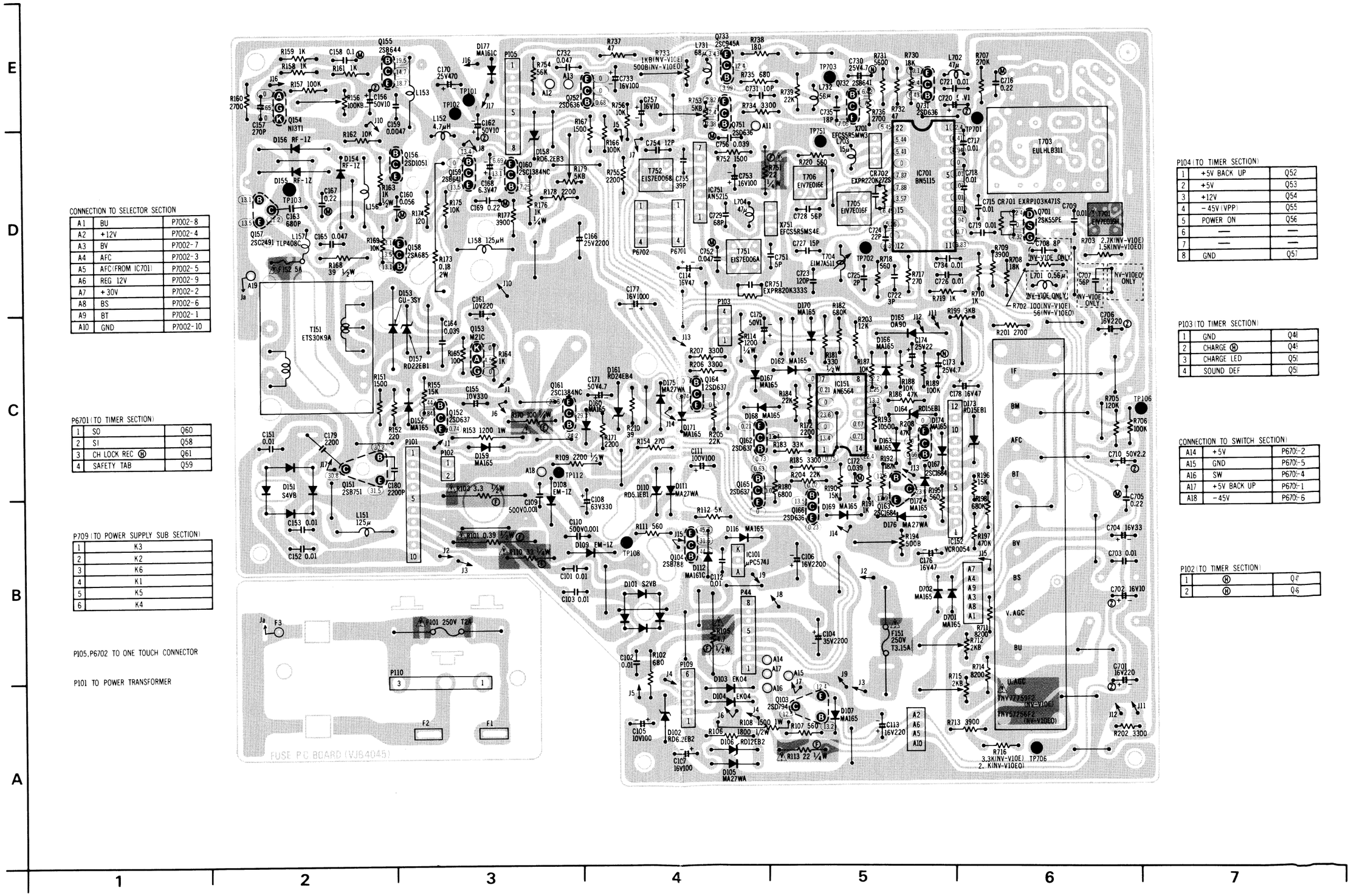

CONNECTION TO SELECTOR SECTION

A1	BU	P7002-8
A2	+12V	P7002-4
A3	BV	P7002-7
A4	AFC	P7002-3
A5	AFC(FROM IC701)	P7002-5
A6	REG 12V	P7002-9
A7	+30V	P7002-2
A8	BS	P7002-6
A9	BT	P7002-1
A10	GND	P7002-10

P6701 (TO TIMER SECTION)

1	SO	Q60
2	SI	Q58
3	CH LOCK REC Ⓗ	Q61
4	SAFETY TAB	Q59

P709 (TO POWER SUPPLY SUB SECTION)

1	K3
2	K2
3	K6
4	K1
5	K5
6	K4

P105, P6702 TO ONE TOUCH CONNECTOR

P101 TO POWER TRANSFORMER

P104 (TO TIMER SECTION)

1	+5V BACK UP	Q52
2	+5V	Q53
3	+12V	Q54
4	−45V (VPP)	Q55
5	POWER ON	Q56
6	—	—
7	—	—
8	GND	Q57

P103 (TO TIMER SECTION)

1	GND	Q48
2	CHARGE Ⓗ	Q49
3	CHARGE LED	Q50
4	SOUND DEF	Q51

CONNECTION TO SWITCH SECTION

A14	+5V	P6701-2
A15	GND	P6701-5
A16	SW	P6701-4
A17	+5V BACK UP	P6701-1
A18	−45V	P6701-6

P102 (TO TIMER SECTION)

1	Ⓗ	Q7
2	Ⓗ	Q6

TV DEMODULATOR BOARD (NV-V10B; VEP4114B)

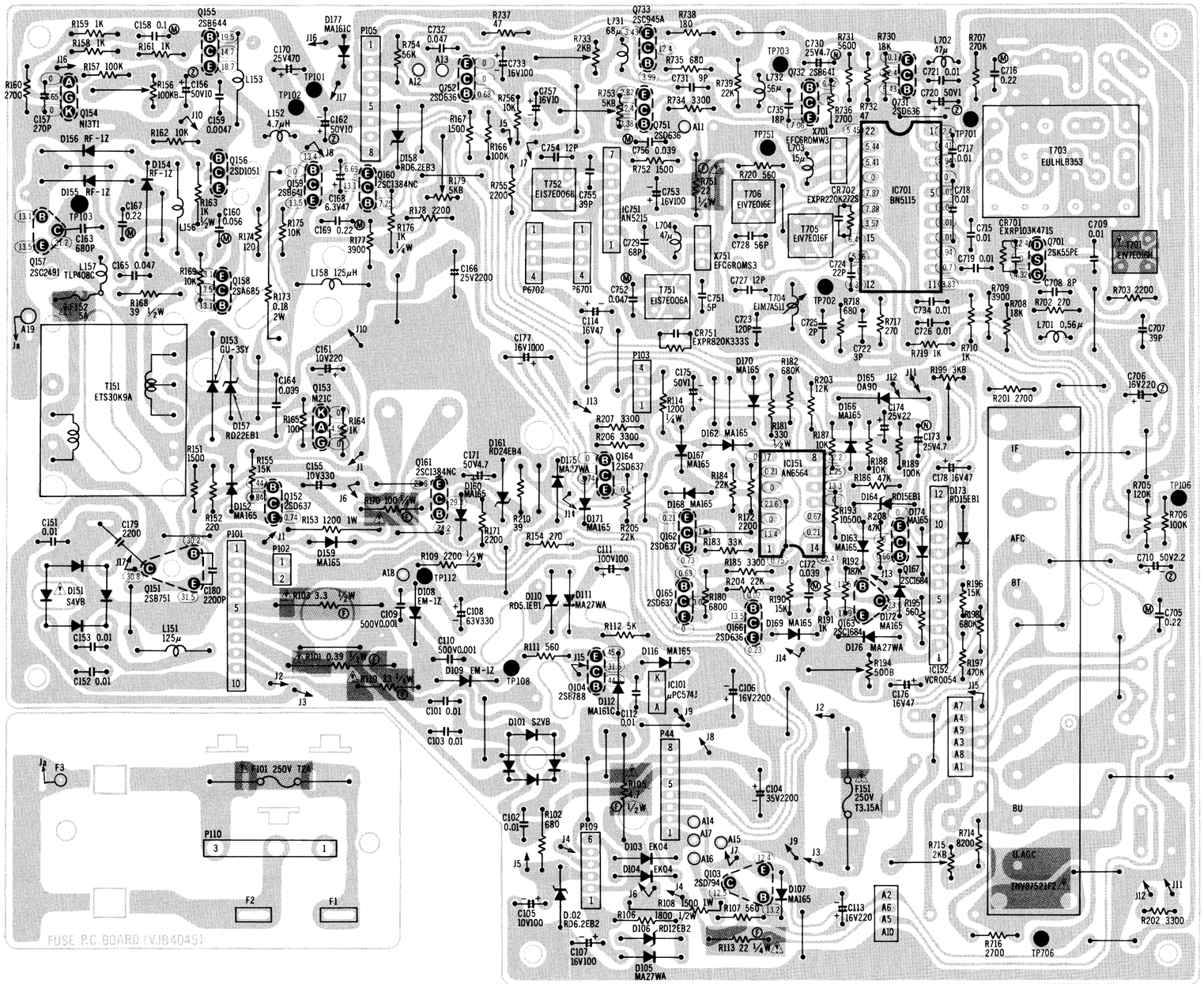

CONNECTION TO SELECTOR SECTION

A1	BU	P7002-8
A2	+12V	P7002-4
A3	BV	P7002-7
A4	AFC	P7002-3
A5	AFC(FROM IC701)	P7002-5
A6	REG 12V	P7002-9
A7	+30V	P7002-2
A8	BS	P7002-6
A9	BT	P7002-1
A10	GND	P7002-10

P6701 (TO TIMER SECTION)

1	SO	Q60
2	SI	Q58
3	CH LOCK REC Ⓗ	Q61
4	SAFETY TAB	Q59

P709 (TO POWER SUPPLY SUB SECTION)

1	K3
2	K2
3	K6
4	K1
5	K5
6	K4

P105, P6702 TO ONE TOUCH CONNECTOR

P101 TO POWER TRANSFORMER

P104 (TO TIMER SECTION)

1	+5V BACK UP	Q52
2	+5V	Q53
3	+12V	Q54
4	−45V (VPP)	Q55
5	POWER ON	Q56
6	—	—
7	—	—
8	GND	Q57

P103 (TO TIMER SECTION)

1	GND	Q48
2	CHARGE Ⓗ	Q49
3	CHARGE LED	Q50
4	SOUND DEF	Q51

CONNECTION TO SWITCH SECTION

A14	+5V	P6705-2
A15	GND	P6705-5
A16	SW	P6705-4
A17	+5V BACK UP	P6705-1
A18	−45V	P6705-6

P102 (TO TIMER SECTION)

1	Ⓗ	Q47
2	Ⓗ	Q46

POWER SUPPLY SUB BOARD (VEP4046A)

Demodu	
Q103	A-5
Q104	B-4
Q151	C-2
Q152	C-3
Q153	C-3
Q154	E-2
Q155	E-2
Q156	D-2
Q157	D-2
Q158	D-2
Q159	D-3
Q160	D-3
Q161	C-3
Q162	C-4
Q163	B-5
Q164	C-4
Q165	C-4
Q166	B-5
Q167	C-5
Q701	D-6
Q730	E-5
Q732	E-5
Q733	E-4
Q751	E-4
Q752	E-3
IC101	B-4
IC151	C-5
IC701	D-5

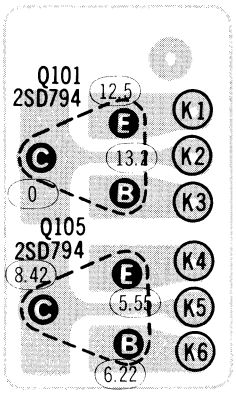

CONNECTION TO TV DEMODULATOR SECTION

K1	P109 – 4
K2	P109 – 2
K3	P109 – 1
K4	P109 – 6
K5	P109 – 5
K6	P109 – 3

TV Demodulator	
Q101	G-17
Q102	G-17
Q103	F-10
Q104	G-8
Q151	E-14
Q152	C-14
Q153	C-14
Q154	C-14
Q155	C-13
Q156	B-13
Q157	D-12
Q158	C-12
Q159	D-12
Q160	B-12
Q161	F-12
Q162	E-11
Q163	C-11
Q164	B-8
Q165	B-8
Q166	B-9
Q167	C-8
Q701	G-5
Q731	B-3
Q732	B-4
Q733	A-4
Q751	A-6
Q752	A-7
IC101	G-7
IC151	D-10
IC152	E-8
IC701	D-5
IC751	B-5

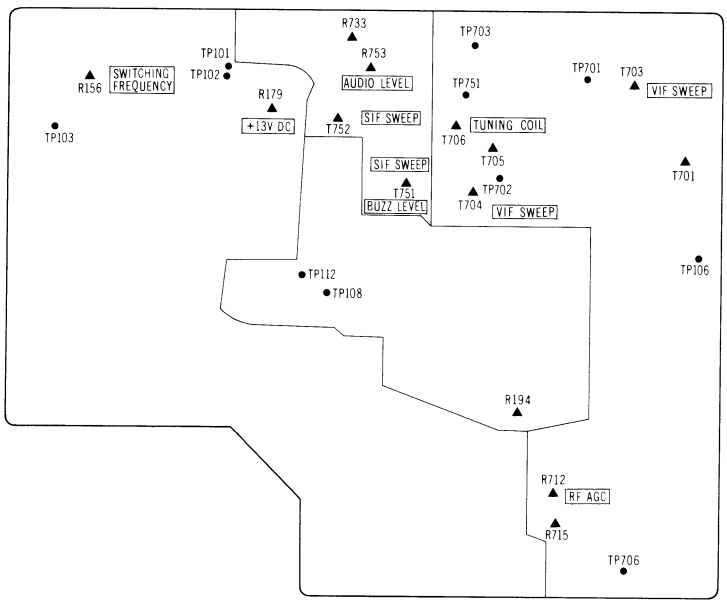

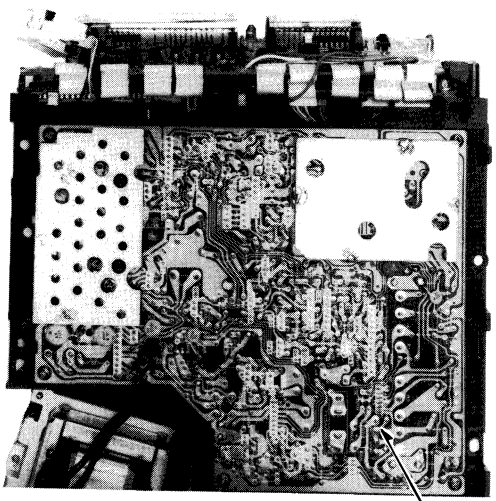

TV Demodulator P.C.Board

Power Supply Sub P.C.Board

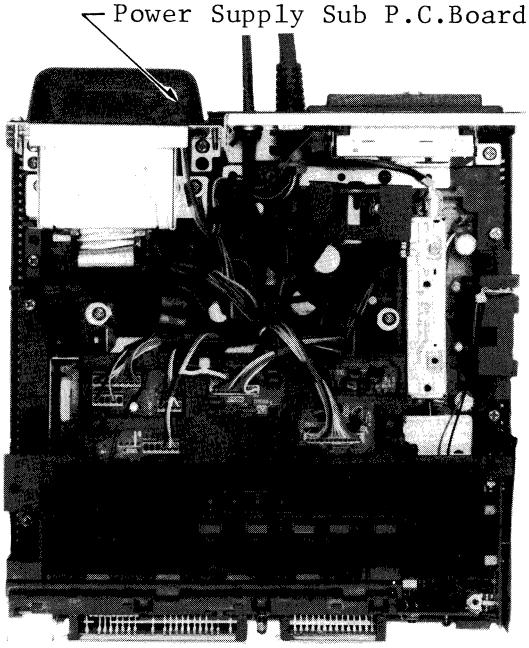

TV DEMODULATOR SCHEMATIC DIAGRAM (TV DEMODULATOR, POWER SUPPLY SUB, FUSE, ANTENNA BOOSTER) ; NV-V10B

FUSE BOA

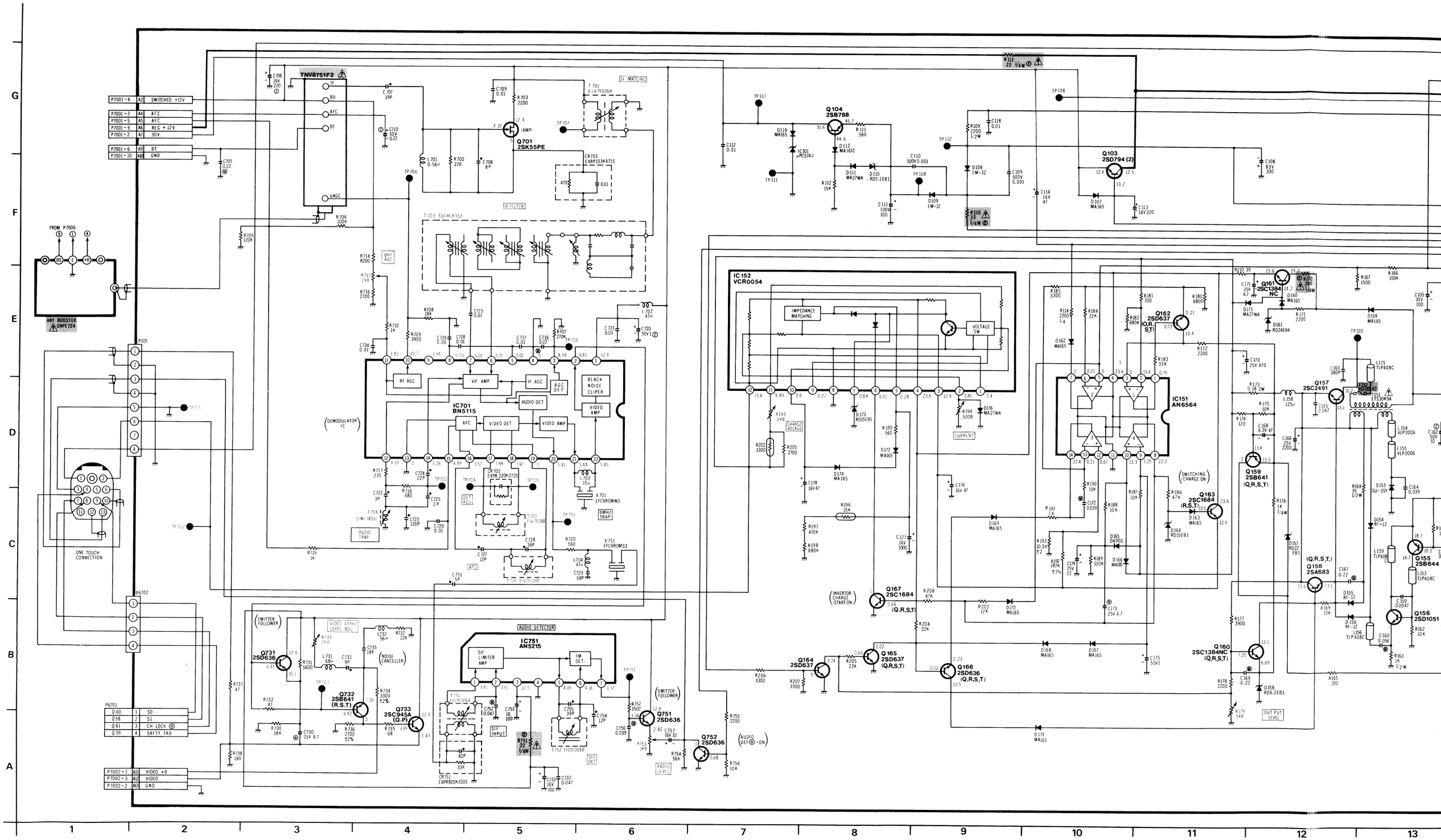

(TV DEMODULATOR, POWER SUPPLY SUB, FUSE, ANTENNA BOOSTER) ; NV-V10B

FUSE BOARD (VEP4045A)

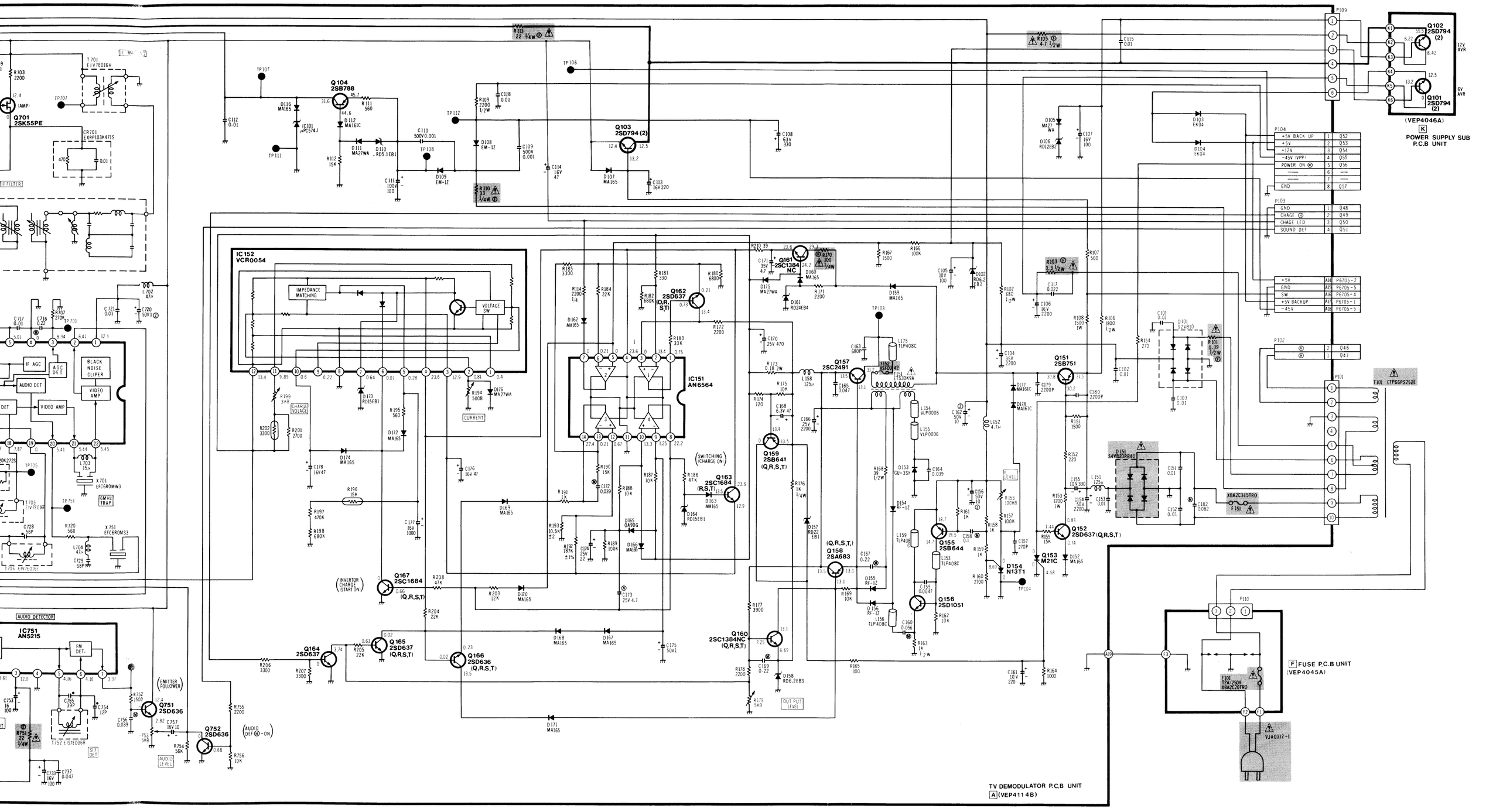

EXPLODED VIEWS ❶ *Programmable Timer/Tuner Section -(1)*

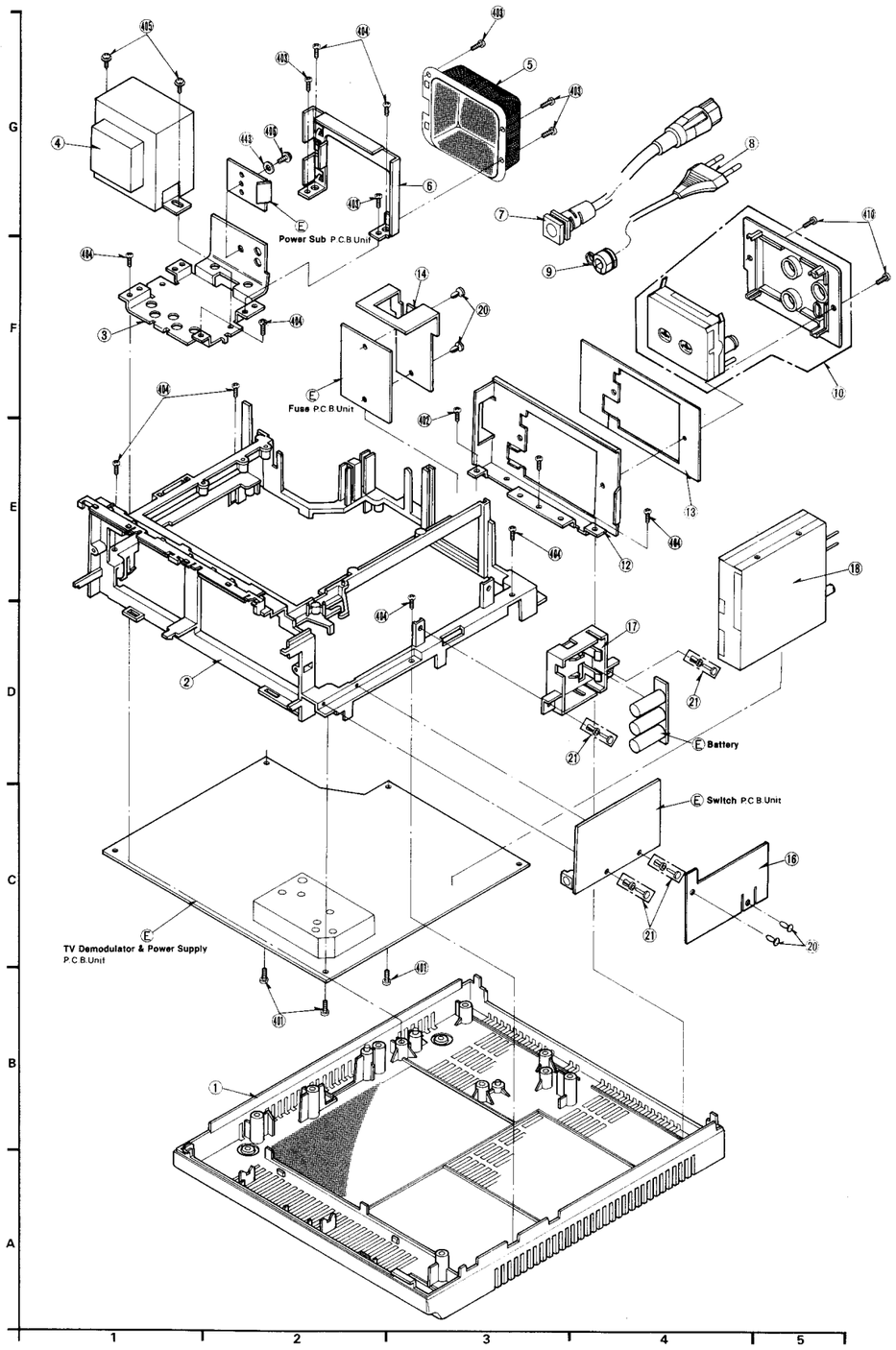

❷ *Programmable Timer/Tuner Section -(2)*

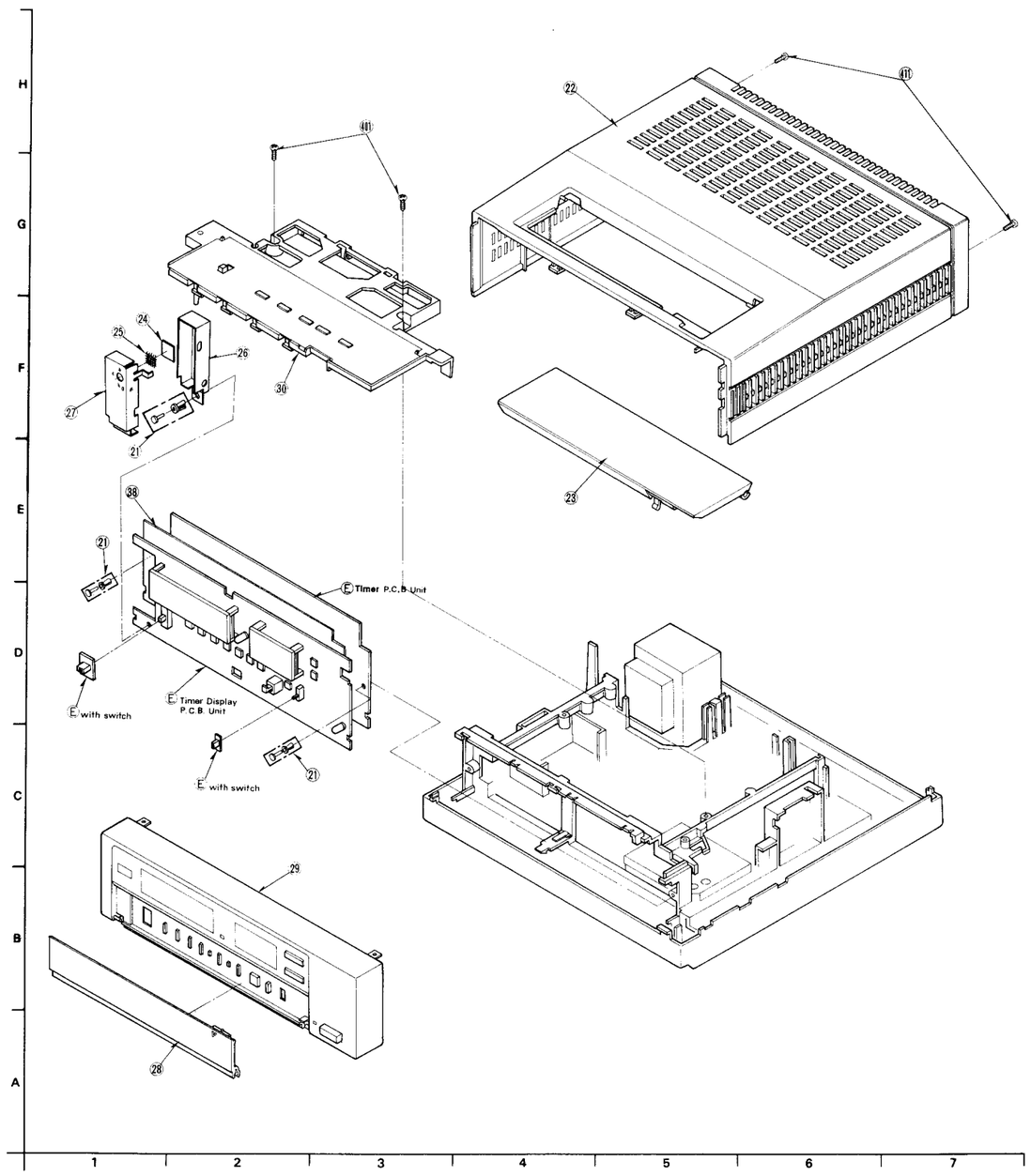

❸ *IR Re*

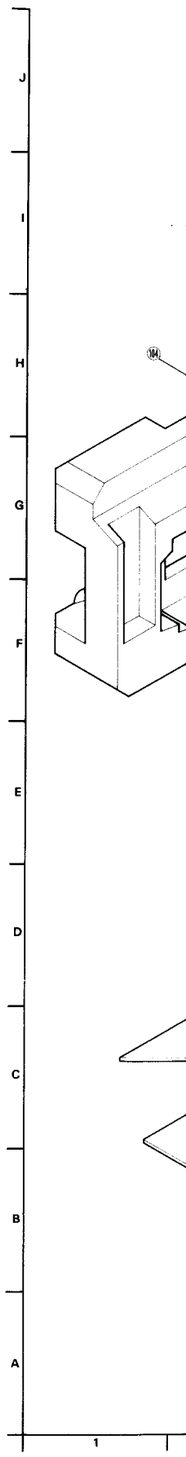

❸ IR Remote Controller Transmitter Section

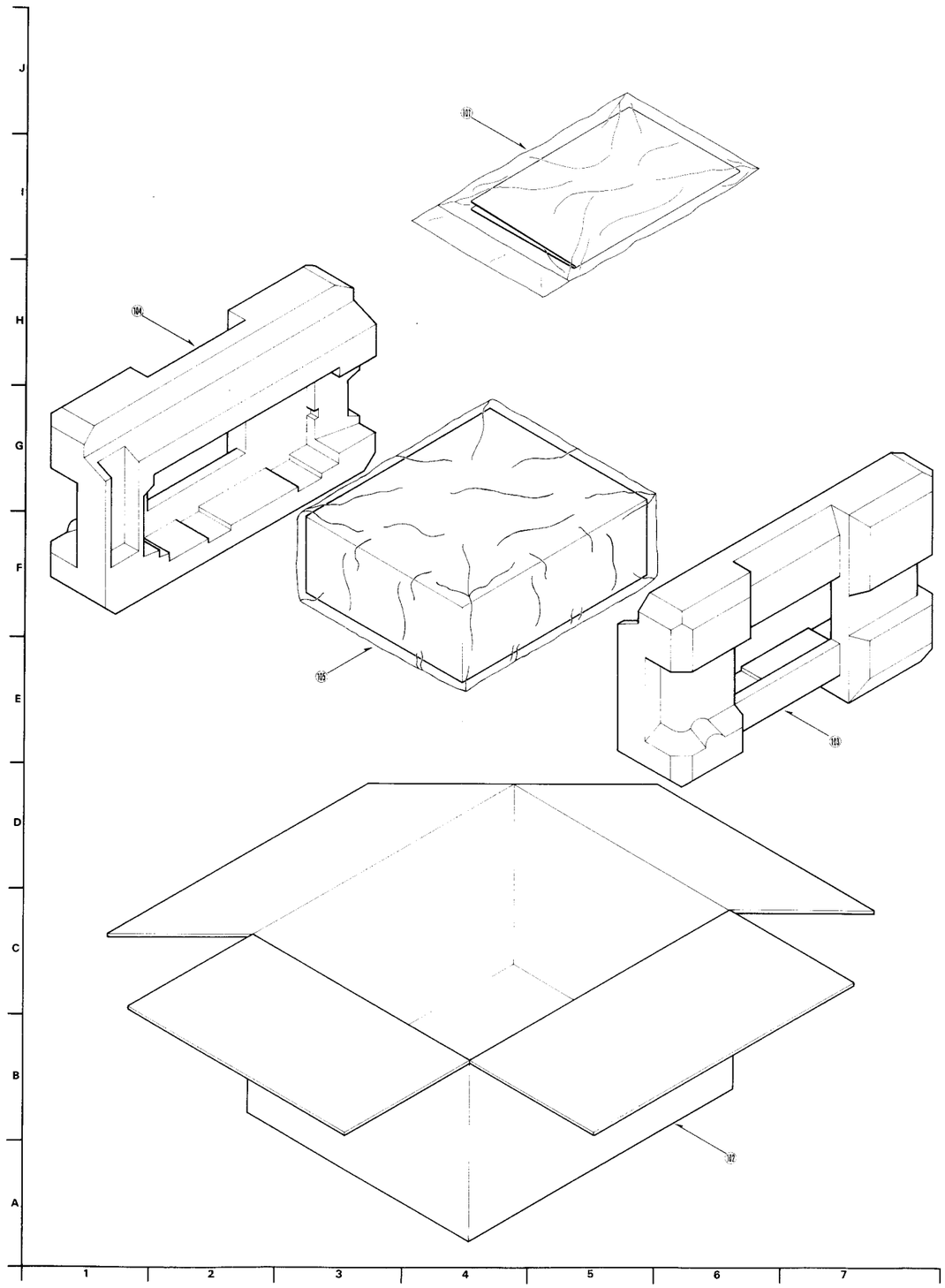

MECHANICAL REPLACEMENT PARTS LIST

Model No. NV-V10E/B/EO

Notes:
1. ★ Be sure to make your orders of replacement parts according to this list.

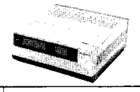

Ref. No.	Part No.	Part Name & Description	Pcs / Set	Remarks
1 (1)	VYK0347	Bottom Case Unit	1	
2 (1)	VMD0352	Chassis Frame	1	
3 (1)	VMA5787	Power Transformer Angle	1	
4 (1)	ETP66PS251E	Power Transformer	1	NV-V10E,EO ⚠
4 (1)	ETP66PE252E	Power Transformer	1	NV-V10B ⚠
5 (1)	VGK1047	Power Transformer Cover	1	
6 (1)	VMA5787	Angle, Power Transformer Cover	1	
7 (1)	VEC0287	13 PIN Cable	1	
8 (1)	VJA0111	AC Cord	1	NV-10E/EO ⚠
8 (1)	VJA0112	AC Cord	1	NV-10B ⚠
9 (1)	VJF0017	AC Cord Bushing	1	⚠
10 (1)	ENPE719	Antenna Terminal Unit	1	NV-V10E ⚠
10 (1)	ENPE724	Antenna Terminal Unit	1	NV-V10B ⚠
10 (1)	ENPE721	Antenna Terminal Unit	1	NV-V10EO ⚠
	VJH0233	Mounting Angle For Antenna Terminal Unit	1	
12 (1)	VMA6010	Rear Angle	1	
13 (1)	VGN1938	Rear Angle Plate	1	NV-V10E
13 (2)	VGN1965	Rear Angle Plate	1	NV-V10EO
13 (2)	VGN1966	Rear Angle Plate	1	NV-V10B
14 (1)	VMZ0434	Fuse P.C.Board Barrier	1	
16 (1)	VMZ0355	Power Switch Board Barrier	1	
17 (1)	VKM0124	Battery Cover	1	
18 (1)	TNV77759F2	Tuner Unit	1	NV-V10E
18 (1)	TNV87521F2	Tuner Unit	1	NV-V10B
18 (1)	TNV57756F2	Tuner Unit	1	NV-V10EO
20 (1)	TMM6490	Clip	4	
21 (1,2)	TMM16489	Rivet	7	
22 (2)	VYP0575	Top Case	1	
23 (2)	VYK0423	Channel Preset Door	1	NV-V10E,EO
23 (2)	VYK0429	Channel Preset Door	1	NV-V10B
24 (2)	VKW0147	Remote Control Receiver Filter	1	
25 (2)	VSC0806	Remote Control Receiver Shield Plate	1	
26 (2)	VSC0800	Shield Case (1)	1	
27 (2)	VSC0801	Shield Case (2)	1	
28 (2)	VKF0463	Timer Control Door	1	
29 (2)	VYP0669	Front Panel	1	
30 (2)	VXU0205	Channel Preset Bracket	1	NV-V10E,EO
30 (2)	VXU0207	Channel Preset Bracket	1	NV-V10B
38 (2)	VMZ0354	Timer P.C.Board Barrier	1	

Ref. No.	Part No.	Part Name & Description	Pcs / Set	Remarks
101 (3)	VQF0867	Fan Bag	1	NV-V10E,EO
101 (3)	VQF0868	Fan Bag	1	NV-V10B
102 (3)	VPG1144	Packing Case	1	NV-V10E
102 (3)	VPG1167	Packing Case	1	NV-V10B
102 (3)	VPG1166	Packing Case	1	NV-V10EO
103 (3)	VPN0779	Right Cushion	1	
104 (3)	VPN0780	Left Cushion	1	
105 (3)	VPF0167	Polyethlene Bag	1	
401 (1,2)	XTV3+10A		8	
402 (1)	XTB4+12A		10	
403 (1,2)	XTV3+8B			
404 (1)	XTN4+12A			
405 (1)	XYN4+F8S			
406 (1)	XYN3+C8			
407 (1)	XYE3+EB8			
408 (1)	XYE4+E8			
409 (1)	XYN3+E5		1	
411 (1,2)	XSB3+8FZS			
412 (2)	XWA3			
413 (1)	XWG3F10			

ELECTRICAL REPLACEMENT PARTS LIST

Model No. NV-V10E/B/EO

Notes:
1. * Be sure to make your orders of replacement parts according to this list.
2. IMPORTANT SAFETY NOTICE
   Components identified by ⚠ have special characteristics important for safety.
   When replacing any of these components, use only the original ones.
3. Unless otherwise specified,
   All resistors are in OHMS (Ω), 1/8W ± 5% carbon. K=1,000Ω, M=1,000KΩ.
   All capacitors are in MICROFARADS (μF), ± 10% P=μμF.

Ref. No.		Part No.	Part Name & Description	Pcs / Set	Remarks
		VEP4114A	TV DEMODULATOR P.C.B.UNIT	1	NV-V10E
		VEP4114B	TV DEMODULATOR P.C.B.UNIT	1	NV-V10B
		VEP4114C	TV DEMODULATOR P.C.B.UNIT	1	NV-V10EO
		VEP4045A	FUSE P.C.B. UNIT	1	
		VEP4046A	POWER SUPPLY SUB P.C.B. UNIT	1	
		VEP4047A	SWITCH P.C.B. UNIT	1	
		VEP4048A	SELECTOR SUB P.C.B. UNIT	1	
		VEP4049A	BACK UP P.C.B. UNIT	1	
		VEP4050A	SELECTOR P.C.B. UNIT	1	NV-V10E/EO
		VEP4060A	SELECTOR P.C.B. UNIT	1	NV-V10B
		VEP4051A	TIMER P.C.B. UNIT	1	NV-V10E/EO
		VEP4054A	TIMER P.C.B. UNIT	1	NV-V10B
		VEP4052A	TIMER DISPLAY P.C.B. UNIT	1	
		VEP4053A	IR RECEIVER P.C.B. UNIT	1	
F101		XBA2C20TRO	Fuse 2A/250V	1	⚠
F151		XBA2C315TRO	Fuse 3.15A/250V	1	⚠
		VMX0237	AC Cord Cover	1	
		ENPE719	ANTENNA BOOSTER		NV-V10E ⚠
		ENPE724	ANTENNA BOOSTER		NV-V10B ⚠
		ENPE721	ANTENNA BOOSTER		NV-V10EO ⚠

Ref. No.		Part No.	Part Name & Description	Pcs / Set	Remarks
		VEP4114A/B/C	TV Demodulator P.C.B.Unit		
			Integrated Circuits		
IC101		μPC574J		1	
IC151		AN6564		1	
IC152		VCR0054		1	
IC701		BN5115	VIF IC	1	
IC751		AN5215	SIF IC	1	
			Transistors		
Q103		2SD794		1	
Q104		2SB788		1	
Q151		2SB751LB		1	
Q152		2SD637		1	
Q153		M21C		1	
Q154		N13T1		1	
Q155		2SB644		1	
Q156		2SD1051		1	
Q157		2SC2491		1	
Q158		2SA683		1	
Q159		2SB641		1	
Q160,161		2SC1384NC		2	
Q162		2SD637		1	
Q163		2SD1684		1	
Q164,165		2SD637		2	
Q166		2SD636		1	
Q167		2SC1684		1	
Q701		2SK55PE		1	
Q731		2SD636		1	
Q732		2SB641		1	
Q733		2SC945A		1	
Q751,752		2SD636		2	
			Diodes		
D101		S2VB10F1		1	
D102		RD6.2EB2	Zener	1	
D103,104		EK04		2	
D105		MA27WA		1	
D106		RD12EB2	Zener	1	
D107		MA165		1	
D108,109		EM1Z		2	
D110		RD5.1EB1	Zener	1	
D111		MA27WA		1	
D112		MA161C		1	
D116		MA161C		1	
D151		S4VB20F4		1	⚠
D152		MA165		1	
D153		GU3SYLF175		1	
D154-156		RF1Z		3	
D157		RD22EB1	Zener	1	
D158		RD6.2EB3	Zener	1	
D159,160		MA165		2	
D161		RD24EB4	Zener	1	
D162,163		MA165		2	
D164		RD15EB1	Zener	1	
D165		OA90G		1	
D166-172		MA165		7	
D173		RD15EB1	Zener	1	
D174		MA165		1	
D175,176		MA27WA		2	
D177,178		MA161C		2	
D701		MA165		1	NV-V10E/EO
D701		T3A205		1	NV-V10B

Ref. No.		Part No.	Part Name & Description	Pcs / Set	Remarks
D702		MA165		1	NV-V10E/EO
			Resistors		
R101		ERQ12HKR39	1/2W 0.39	1	⚠
R102		ERDS1TJ681	1/2W 680	1	
R103		ERQ12HJ3R3	1/2W 3.3	1	⚠
R105		ERQ12HJ4R7	1/2W 4.7	1	
R106		ERDS1TJ182	1/2W 1.8K	1	
R107		ERD10TJ561	560	1	
R108		ERG1ANJ152	1W 1.5K	1	
R109		ERDS1TJ222	1/2W 2.2K	1	
R110		ERQ14AJ330	1/4W 33	1	⚠
R111		ERD10TJ561	560	1	
R112		ERD10TJ153	15K	1	
R113		ERQ14AJ220	1/4W 22	1	⚠
R114		ERD25TJ122	1/4W 1.2K	1	
R151		ERD10TJ152	1.5K	1	
R152		ERD10TJ221	220	1	
R153		ERG1ANJ122	1W 1.2K	1	
R154		ERD10TJ271	270	1	
R155		ERD10TJ153	15K	1	
R156		EVN61AA00B15	Variable 100K	1	
R157		ERD10TJ104	100K	1	
R158,159		ERD10TJ102	1K	2	
R160		ERD10TJ272	2.7K	1	
R161		ERD10TJ102	1K	1	
R162		ERD10TJ103	10K	1	
R163		ERDS1TJ102	1/2W 1K	1	
R164		ERD10TJ102	1K	1	
R165		ERD10TJ101	100	1	
R166		ERD10TJ104	100K	1	
R167		ERD10TJ152	1.5K	1	
R168		ERDS1TJ390	1/2W 39	1	
R169		ERD10TJ103	10K	1	
R170		ERQ14AJ101	1/4W 100	1	
R171,172		ERD10TJ222	2.2K	2	
R173		ERF2AJR18	2W 0.18	1	
R174		ERD10TJ121	120	1	
R175		ERD10TJ103	10K	1	
R176		ERD25TJ102	1/4W 1K	1	
R177		ERD10TJ392	3.9K	1	
R178		ERD10TJ222	2.2K	1	
R179		EVN61AA00B53	Variable 5K	1	
R180		ERD10TJ682	6.8K	1	
R181		ERDS1TJ331	1/2W 330	1	
R182		ERD10TJ684	680K	1	
R183		ERD10TJ333	33K	1	
R184		ERD10TJ223	22K	1	
R185		ERD10TJ332	3.3K	1	
R186		ERD10TJ473	47K	1	
R187,188		ERD10TJ103	10K	2	
R189		ERD10TJ104	100K	1	
R190		ERD10TJ153	15K	1	
R191		ERD10TJ102	1K	1	
R192		ERO10AKF1873	187K	1	
R193		ERO10AKG1052	10.5K	1	
R194		EVN61AA00B52	Variable 500	1	
R195		ERD10TJ561	560	1	
R196		ERTD2FHL153	Thermistor	1	
R197		ERD10TJ474	470K	1	
R198		ERD10TJ684	680K	1	
R199		EVN61AA00B33	Variable 3K	1	
R201		ERD10TJ272	2.7K	1	
R202		ERTD2FHL332	Thermistor	1	
R203		ERD10TJ123	12K	1	
R204,205		ERD10TJ223	22K	2	
R206,207		ERD10TJ332	3.3K	2	

Ref. No.		Part No.	Part Name & Description	Pcs / Set	Remarks
R208		ERD10TJ473	47K	1	
R210		ERD10TJ390	39	1	
R702		ERD10TJ271	270	1	NV-V10E/B
R702		ERD10TJ560	56	1	NV-V10EO
R703		ERD10TJ152	1.5K	1	NV-V10E/EO
R703		ERD10TJ222	2.2K	1	NV-V10B
R705		ERD10TJ124	120K	1	
R706		ERD10TJ104	100K	1	
R707		ERD10TJ274	270K	1	
R708		ERD10TJ183	18K	1	
R709		ERD10TJ392	3.9K	1	
R710		ERD10TJ102	1K	1	
R711		ERD10TJ822	8.2K	1	NV-V10E/EO
R712		EVN61AA00B23	Variable 2K	1	NV-V10E/EO
R713		ERD10TJ392	3.9K	1	NV-V10E/EO
R714		ERD10TJ8222	8.2K	1	
R715		EVN61AA00B23	Variable 2K	1	
R716		ERD10TJ332	3.3K	1	NV-V10E
R716		ERD10TJ272	2.7K	1	NV-V10B
R716		ERD10TJ392	3.9K	1	NV-V10EO
R717		ERD10TJ271	270	1	
R718		ERD10TJ561	560	1	NV-V10E/EO
R718		ERD10TJ681	680	1	NV-V10B
R719		ERD10TJ102	1K	1	
R720		ERD10TJ561	560	1	
R730		ERD10TJ183	18K	1	
R731		ERD10TJ562	5.6K	1	
R732		ERD10TJ470	47	1	
R733		EVN61AA00B13	Variable 1K	1	NV-V10E
R733		EVN61AA00B23	Variable 2K	1	NV-V10B
R733		EVN61AA00B52	Variable 500	1	NV-V10EO
R734		ERO10TKG3301	3.3K	1	
R735		ERD10TJ680	68	1	
R736		ERO10TKG2701	2.7K	1	
R737		ERD10TJ470	47	1	
R738		ERD10TJ181	180	1	
R739		ERD10TJ123	12K	1	
R751		ERQ14AJ220	1/4W 22	1	⚠
R752		ERD10TJ152	1.5K	1	
R753		EVN61AA00B53	Variable 5K	1	
R754		ERD10TJ563	56K	1	
R755		ERD10TJ222	2.2K	1	
R756		ERD10TJ103	10K	1	
			Capacitors		
C101-103		ECKF1H103ZF	Ceramic 50V 0.01	3	
C104		ECEA1VS222	Electrolytic 35V 2200	1	
C105		ECEA1AG101	Electrolytic 10V 100	1	
C106		ECEA1CS222	Electrolytic 16V 2200	1	
C107		ECEA1CS101	Electrolytic 16V 100	1	
C108		ECEA1JS331	Electrolytic 63V 330	1	
C109,110		ECKF2H102KB	Ceramic 100V 0.001	2	
C111		ECEA2AS101	Electrolytic 100V 100	1	
C112		ECKF1H103ZF	Ceramic 50V 0.01	1	
C113		ECEA1CS221	Electrolytic 16V 220	1	
C114		ECEA1CS470	Electrolytic 16V 47	1	
C115		ECKF1H103ZF	Ceramic 50V 0.01	1	
C117		ECKF1H223ZF	Ceramic 50V 0.022	1	
C118		ECKF1H103ZF	Ceramic 50V 0.01	1	
C151-153		ECKF1H103ZF	Ceramic 50V 0.01	3	
C154		ECET50R222	Electrolytic 50V 2200	1	
C155		ECEA10T330	Electrolytic 10V 330	1	
C156		ECEA50Z10	Electrolytic 50V 10	1	
C157		ECKF1H271KB	Ceramic 50V 270P	1	
C158		ECQV05104JZ	Mylar 50V 0.1	1	
C159		ECKF1H472KB	Ceramic 50V 0.0047	1	
C160		ECQM1H563KV	Mylar 50V 0.056	1	

Ref. No.		Part No.	Part Name & Description	Pcs / Set	Remarks
C161		ECEA10T220	Electrolytic 10V 220	1	
C162		ECEA50Z10	Electrolytic 50V 10	1	
C163		ECKF2H681KB	Ceramic 100V 680P	1	
C164		ECQP1393JZ	Mylar 100V 0.039	1	
C165		ECKF1H473ZF	Ceramic 50V 0.047	1	
C166		ECEA1ES222	Electrolytic 25V 2200	1	
C167		ECQV05224JZ	Mylar 50V 0.22	1	
C168		ECEA0JS470	Electrolytic 6.3V 47	1	
C169		ECQV05224JZ	Mylar 50V 0.22	1	
C170		ECEA1ES471	Electrolytic 25V 470	1	
C171		ECEA1HG4R7	Electrolytic 50V 4.7	1	
C172		ECQM1H393KZ	Mylar 50V 0.039	1	
C173		ECEA1EN4R7	Electrolytic 25V 4.7	1	
C174		ECEA1ES220	Electrolytic 25V 22	1	
C175		ECEA1HS010	Electrolytic 50V 1	1	
C176		ECEA1CS470	Electrolytic 16V 47	1	
C177		ECEA16V102	Electrolytic 16V 1000	1	
C178		ECEA1CS470	Electrolytic 16V 47	1	
C179,180		ECKF2H222KB	Ceramic 100V0.0022	2	
C182		ECQV05823JZ	Mylar 50V 0.082	1	
C701		ECEA16Z220	Electrolytic 16V 220	1	NV-V10E/E0
C702		ECEA16Z10	Electrolytic 16V 10	1	
C703		ECKF1H103ZF	Ceramic 50V 0.01	1	NV-V10E/E0
C704		ECEA1CS330	Electrolytic 16V 33	1	NV-V10E/E0
C705		ECQV05224JZ	Mylar 50V 0.22	1	
C706		ECEA16Z220	Electrolytic 16V 220	1	
C707		ECCF1H560JC	Ceramic 50V 56P	1	NV-V10E
C707		ECCF1H390JC	Ceramic 50V 39P	1	NV-V10B
C708		ECCF1H080DC	Ceramic 50V 8P	1	
C709		ECKF1H103ZF	Ceramic 50V 0.01	1	
C710		ECEA50Z2R2	Electrolytic 50V 2.2	1	
C715		ECKF1H103ZF	Ceramic 50V 0.01	1	
C716		ECQV05224JZ	Mylar 50V 0.22	1	
C717-719		ECKF1H103ZF	Ceramic 50V 0.01	3	
C720		ECEA50Z1	Electrolytic 50V 1	1	
C721		ECKF1H103ZF	Ceramic 50V 0.01	1	
C722		ECCF1H030CC	Ceramic 50V 3P	1	
C723		ECCF1H121JL	Ceramic 50V 120P	1	
C724		ECCF1H220JC	Ceramic 50V 22P	1	
C725		ECCF1H020CC	Ceramic 50V 2P	1	
C726		ECKF1H103ZF	Ceramic 50V 0.01	1	
C727		ECCF1H150JC	Ceramic 50V 15P	1	NV-V10E/E0
C727		ECCF1H120JC	Ceramic 50V 12P	1	NV-V10B
C728		ECCF1H560JR	Ceramic 50V 56P	1	
C729		ECCF1H680JP	Ceramic 50V 68P	1	
C730		ECEA1EN4R7	Electrolytic 25V 4.7	1	
C731		ECCF1H100DC	Ceramic 50V 10P	1	NV-V10E/E0
C731		ECCF1H090CC	Ceramic 50V 9P	1	NV-V10B
C732		ECKF1H473ZF	Ceramic 50V 0.047	1	
C733		ECEA1CS101	Electrolytic 16V 100	1	
C734		ECKF1H103ZF	Ceramic 50V 0.01	1	
C735		ECCF1H330JC	Ceramic 50V 33P	1	
C751		ECCF1H050CC	Ceramic 50V 5P	1	
C752		ECQM1H473KV	Mylar 50V 0.047	1	
C753		ECEA1CS101	Electrolytic 16V 100	1	
C754		ECCF1H120JC	Ceramic 50V 12P	1	
C755		ECCF1H390JP	Ceramic 50V 39P	1	
C756		ECQM1H393JZ	Mylar 50V 0.039	1	
C757		ECEA1CS100	Electrolytic 16V 10	1	
			Complex Components		
CR701		EXRP103P471		1	
CR702		EXPR220K272		1	
CR751		EXPR820K333		1	

Ref. No.		Part No.	Part Name & Description	Pcs / Set	Remarks
			Coils		
L151		VTQ0017		1	
L152		TLT047K999G		1	
L153		TLP408C		1	
L154,155		VLP0006		2	
L156		TLP408C		1	
L157		TSC909		1	
L158		VTQ0017		1	
L159		TLP408C		1	
L701		TLQR56N205C		1	NV-V10E/B
L702		TLT470K999G		1	
L703		TLQ150K205C		1	
L704		TLQ470K205C		1	
L731		TLT680J999G		1	
L732		TLT680J999G		1	
			Filters		
X701		EFCS5R5MW3		1	NV-V10E/E0
X701		EFCS6R0MW3		1	NV-V10B
X751		EFCS5R5MS4E		1	NV-V10E/E0
X751		EFCS6R0MS3		1	NV-V10B
			Connectors		
P101		VJP1146	10P	1	
P102		VJP1141	2P	1	
P103		VJP1231	4P	1	
P104		VJP1235	8P	1	
P105		VJP1145	8P	1	
P109		VJP1233	6P	1	
P6701,6702		VJP1188	4P	2	
			Transformers		
T151		ETS30K9A		1	
T701		EIV7E016H		1	
T703		EULHLB311		1	NV-V10E/E0
T703		EULHLB353		1	NV-V10B
T704		EIM7A511		1	
T705,706		EIV7E016F		2	
T751		EIS7E006A		1	
T752		EIS7E006B		1	
			Miscellaneous		
		VSC0863	Heat Sink	1	
		XTV3+6B	Screw	1	
		VMA6114	Mounting Angle	1	
			for Temp. Fuse		
		VSC0691	Heat Sink	1	
F151		TJC6320	Fuse Holder	2	⚠
F152		VSF0024	Temp. Fuse	1	⚠
		XNG3BS		1	
		XSN3+12S		1	
		XWA3		1	
		XWG3		1	
		TNV77759F2	Tuner	1	NV-V10E
		TNV87521F2	Tuner	1	NV-V10B
		TNV57756F2	Tuner	1	NV-V10E0
		VSC0694	VIF Shield Case	1	
		VSC0827	VIF Shield Case	1	

Ref. No.	Part No.	Part Name & Description	Pcs / Set	Remarks
	VSC0828	VIF Shield Case	1	
	XRY26X40BD	Eyelet	4	
	VEP4045A	Fuse P.C.B. Unit		
		Miscellaneous		
	TJC6320	Fuse Holder	2	
	VEP4046A	Power Supply Sub P.C. P.C.B. Unit		
		Miscellaneous		
	TMK6436	Mica Sheet	2	
Q101	2SD794	Transistor	1	
Q105	2SD794	Transistor	1	
	VSC0690	Heat Sink	1	
	XYN3+F8	Screw	2	
	VEP4047A	Switch P.C.B. Unit		
		Transistors		
Q6771	2SB726		1	
Q6772	2SC1473		1	
Q6773	2SD637		1	
Q6774	2SD636		1	
Q6791	2SA564		1	
Q6792	2SC1684		1	
Q6793	2SB641		1	
		Diodes		
D6771	MA522VT		1	
D6772	MA165		1	
D6791	LN28WPVT	LED	1	
D6792,6793	MA165		2	
D6794	OA90G		1	
		Resistors		
R6771-6773	ERD10TJ103	10K	3	
R6774	ERD10TJ473	47K	1	
R6775	ERD10TJ103	10K	1	
R6776	ERD25TJ272	1/4W 2.7K	1	
R6778	EVN60AA00B53	Variable 5K	1	
R6779	ERD10TJ103	10K	1	
R6780	ERD10TJ332	3.3K	1	
R6781	ERD10TJ223	22K	1	
R6791	ERD10TJ474	470K	1	

Ref. No.	Part No.	Part Name & Description	Pcs / Set	Remarks
R6792	EVN60AA00B55	Variable 500K	1	
R6793	ERD10TJ154	150K	1	
R6794	ERD10TJ564	560K	1	
R6795,6796	ERD10TJ473	47K	2	
R6797	ERD10TJ333	33K	1	
R6798	ERD10TJ682	6.8K	1	
R6799	ERD10TJ181	180	1	
		Capacitors		
C6763	ECEA16Z10	Electrolytic 16V 10	1	
C6764	ECKF1H223ZF	Ceramic 50V 0.022	1	
C6765	ECKF1H103ZF	Ceramic 50V 0.01	1	
C6771	ECEA1HS010	Electrolytic 50V 1	1	
		Switch		
SW6791	EVQQH504B		1	
		Connectors		
P6703	VJP1146	10P	1	
P6704	VJP1229	2P	1	
P6705	VJP1233	6P	1	
	VEP4048A	Selector Sub P.C.B. Unit		
		Integrated Circuits		
IC6801	AN5421	Sync Sep. IC	1	
IC6802	AN6913	Comparator IC	1	
IC6803	μPD4066BC	Switch IC	1	
IC7301	BA7004	Test Signal IC	1	
		Transistors		
Q6801	2SD636		1	
Q6803	2SD636		1	
Q7301	2SD636		1	
		Resistors		
R6801	ERD10TJ101	100	1	
R6802	ERD10TJ471	470	1	
R6803	ERD10TJ562	5.6K	1	
R6804	ERD10TJ472	4.7K	1	
R6805	ERD10TJ151	150	1	
R6806	ERD10TJ104	100K	1	
R6811	EVN61AA00B23	Variable 2K	1	
R6812	ERD10TJ562	5.6K	1	
R6813	ERD10TJ393	39K	1	
R6814	ERD10TJ222	2.2K	1	
R6815	ERD10TJ822	8.2K	1	
R6816	ERD10TJ332	3.3K	1	
R6817	ERD10TJ393	39K	1	
R6821-6823	ERD10TJ473	47K	3	

Ref. No.		Part No.	Part Name & Description	Pcs / Set	Remarks
R6824,6825		ERD10TJ333	33K	2	
R6826		ERD10TJ473	47K	1	
R6827		ERD10TJ103	10K	1	
R6828		ERD10TJ682	6.8K	1	
R6829		ERD10TJ103	10K	1	
R7301		ERD10TJ101	100	1	
R7302		ERD10TJ330	33	1	
			Capacitors		
C6801		ECEA1CS330	Electrolytic 16V 33	1	
C6802		ECQM1H392KZ	Mylar 50V 0.0039	1	
C6803		ECQM1H103KZ	Mylar 50V 0.01	1	
C6806		ECEA1HS010	Electrolytic 50V 1	1	
C6807		ECQM1H103KZ	Mylar 50V 0.01	1	
C6808		ECEA50Z1	Electrolytic 50V 1	1	
C6809		ECQM1H272JZ	Mylar 50V 0.0027	1	
C6810		ECQP1562JZ	Mylar 100V0.0056	1	
C6812		ECQV05104KB	Mylar 50V 0.1	1	
C6813		ECEA1CS101	Electrolytic 16V 100	1	
C6815		ECEA1CS101	Electrolytic 16V 100	1	
C7301,7302		ECKW1H332KB	Ceramic 50V 0.0033	2	
			Crystal		
X7301		VSX0099		1	
		VEP4049A	Back up P.C.B. Unit		
			Capacitors		
C6795-6797		EECW2R3A3R3	Gold 2.3V 3.3	3	
			Miscellaneous		
		VKM0124	Battery Case	1	

Ref. No.		Part No.	Part Name & Description	Pcs / Set	Remarks
		VEP4050A	Selector P.C.B. Unit		
		VEP4060A			
			Integrated Circuits		
IC7051		μPD4049UBC	Inverter IC	1	
			Transistors		
Q7001		2SC1685		1	
Q7002		2SA564A		1	
Q7003,7004		2SC1685		2	
Q7005		2SA564		1	
Q7051		2SD636		1	NV-V10E/EO
Q7052		2SD637		1	NV-V10E/EO
Q7053,7054		2SD636		2	NV-V10E/EO
Q7055,7056		2SB643		2	NV-V10E/EO
Q7057,7058		2SB641		2	
Q7059		2SD636		1	NV-V10B
Q7060		2SB641		1	NV-V10B
			Diodes		
D6852		MA165		1	
D6854		MA165		1	
D7051,7052		MA165		2	NV-V10E/EO
D7053		LN29RP	LED	1	
D7054-7056		LN29RP	LED	1	NV-V10E/EO
D7057		LN29RP	LED	1	
D7058		MA150		1	NV-V10B
D7059		MA161C		1	
			Resistors		
R6851		ERD10TJ104	100K	1	
R6857		ERD10TJ103	10K	1	
R6859		ERD10TJ124	120K	1	
R6860		ERD10TJ221	220	1	
R7001		ERD10TJ223	22K	1	
R7002,7003		ERD10TJ473	47K	2	
R7004,7005		ERD10TJ104	100K	2	
R7006		ERD10TJ223	22K	1	
R7007,7008		ERD10TJ104	100K	2	
R7009		ERD10TJ103	10K	1	
R7010		ERD10TJ472	4.7K	1	
R7011,7012		ERD10TJ333	33K	2	
R7051		ERD25TJ102	1/4W 1K	1	NV-V10E/EO
R7052		ERD10TJ103	10K	1	NV-V10E/EO
R7053,7054		ERD25TJ102	1/4W 1K	2	NV-V10E/EO
R7057		ERD10TJ331	330	1	
R7060		ERD10TJ331	330	1	
R7061		ERD10TJ124	120K	1	NV-V10B
R7062		ERD10TJ104	100K	1	NV-V10B
R7063,7064		ERD10TJ332	3.3K	2	NV-V10B
R7074		ERD10TJ224	220K	1	NV-V10E/EO
R7075		ERD10TJ104	100K	1	NV-V10E/EO
			Capacitors		
C6852		ECQM1H392KZ	Mylar 50V 0.0039	1	
C7001		ECQV05014JB	Mylar 50V 0.1	1	
C7002		ECQV05223JB	Mylar 50V 0.022	1	
C7003		ECQV05473JB	Mylar 50V 0.047	1	
C7004		ECQV05223JB	Mylar 50V 0.022	1	
C7005		ECQV05473JZ	Mylar 50V 0.047	1	
C7051		ECQV05224JZ	Mylar 50V 0.22	1	

Ref. No.		Part No.	Part Name & Description	Pcs / Set	Remarks
C7052		ECEA1CS100	Electrolytic 16V 10	1	
C7053		ECKF1H103ZF	Ceramic 50V 0.01	1	NV-V10B
			Complex Components		
CR7051		EXBP84104K		1	
CR7052		EXBS84562K		1	NV-V10E/EO
CR7053		EXBS84103K		1	NV-V10E/EO
CR7054		EXBS85103K		1	NV-V10E/EO
CR7055		EXBS84332K		1	
			Switches		
SW7051-7055		EVQQS405K		5	
SW7301		VES0198		1	
			Connectors		
P7001		VJP1237	10P	1	
P7002		VJP1142	3P	1	
P7003		VJP1145	8P	1	
P7004		VJP1144	6P	1	
P7005		VJP1239	12P	1	
P7006		VJP1143	5P	1	
P7007		VJP1188	4P	1	
		VEP4051A	Timer P.C.B. Unit		
		VEP4054A			
			Integrated Circuits		
IC6703		MN1455BVC	Timer IC	1	
IC6704		MN1512VTB		1	
IC6705		MN1219	Memory IC	1	
			Transistors		
Q6721,6722		2SD636		2	
Q6723		2SB641		1	(R)
Q6724-6731		2SD636		8	
			Diodes		
D6721-6723		MA165		3	
D6724		RD27EB3	Zener	1	
D6725		MA27WA		1	
D6726,6727		MA165		2	
D6728		MA165		1	NV-V10B
D6729		MA165		1	NV-V10B
D6730-6734		MA165		5	
D6735		RD7.5EB1	Zener	1	
D6736,6737		MA165		1	
			Resistors		
R6720		ERD10TJ122	1.2K	1	

Ref. No.		Part No.	Part Name & Description	Pcs / Set	Remarks
R6721		ERC14GJ126	1/4W 12M	1	
R6722		ERD10TJ104	100K	1	
R6723,6724		ERD10TJ471	470	2	
R6725,6726		ERD10TJ223	22K	2	
R6727		ERD10TJ104	100K	1	
R6728		ERD10TJ473	47K	1	
R6732		ERD10TJ104	100K	1	
R6733		ERD10TJ471	470	1	
R6735		ERD10TJ562	5.6K	1	
R6736		ERD10TJ272	2.7K	1	
R6738		ERD10TJ562	5.6K	1	
R6740-6743		ERD10TJ471	470	4	
R6744		ERD10TJ562	5.6K	1	
R6745		ERD10TJ472	4.7K	1	
R6746		ERD10TJ471	470	1	
R6749		ERD10TJ562	5.6K	1	
R6750		ERD10TJ222	2.2K	1	
R6751		ERD10TJ472	4.7K	1	
R6752		ERD10TJ122	1.2K	1	
R6753		ERD10TJ153	15K	1	NV-V10E/EO
R6753		ERD10TJ822	8.2K	1	NV-V10B
R6754		ERD10TJ333	33K	1	
R6755		ERD10TJ103	10K	1	
R6756		ERD10TJ392	3.9K	1	
R6757		ERD10TJ473	47K	1	
R6759		ERD10TJ104	100K	1	
R6761		ERD10TJ103	10K	1	
R6762,6763		ERD10TJ104	100K	2	
R6764		ERD10TJ562	5.6K	1	
R6766		ERD10TJ222	2.2K	1	
R6767		ERD10TJ123	12K	1	
R6768		ERD10TJ222	2.2K	1	
			Capacitors		
C6721		ECCF1H080DC	Ceramic 50V 8P	1	
C6722		ECV1ZW20X32	Trimmer 20P	1	
C6723		ECCF1H220JC	Ceramic 50V 22P	1	
C6724		ECCF1H330JC	Ceramic 50V 33P	1	
C6725,6726		ECKF1H223ZF	Ceramic 50V 0.022	2	
C6727		ECEA1AS101	Electrolytic 10V 100	1	
C6731		ECEA50Z4R7	Electrolytic 50V 4.7	1	
C6732		ECEA1AS101	Electrolytic 10V 100	1	
C6733		ECKF1H103ZF	Ceramic 50V 0.01	1	
C6734		ECKF1H223ZF	Ceramic 50V 0.022	1	
C6735		ECCF1H101JC	Ceramic 50V 100P	1	
C6736		ECCF1H330JC	Ceramic 50V 33P	1	
C6738		ECKF1H103ZF	Ceramic 50V 0.01	1	
C6739		ECKF1H102PF	Ceramic 50V 0.001	1	
			Complex Components		
CR6703		EXBS86104K		1	NV-V10E/EO
CR6703		EXBH86297J		1	NV-V10B
CR6704		EXBP84473K		1	
CR6705		EXRP101K392S		1	
CR6706		EXBS84103K		1	
			Crystals		
X6701		VSX0071A		1	
X6702		VSX0094		1	
X6703		VSX0082		1	

Ref. No.		Part No.	Part Name & Description	Pcs / Set	Remarks
		VEP4052A	Timer Display P.C.B. Unit		
			Integrated Circuits		
IC6701,6702		AN6873N	Driver IC	2	
			Diodes		
D6701		LN21RCPHL	LED	1	
D6703		LN21RCPHL	LED	1	
D6705		RD24EB3	Zener	1	
D6706		RD10EB2	Zener	1	
D6707		RD6.8EB2	Zener	1	
D6708-6712		MA165		5	
D6714		MA165		1	
			Resistors		
R6701		ERD25TJ122	1/4W 1.2K	1	
R6705		ERD10TJ104	100K	1	
R6706,6707		ERD10TJ100	10	2	
			Switches		
SW6701		VES0208		1	
SW6702-6710		EVQQS405K		9	
SW6711		ESB641		1	
SW6712		VES0198		1	
SW6713,6714		EVQQS405K		2	
			Miscellaneous		
DP6701		VSL0010	Indicator	1	
DP6702		VSL0014	Indicator	1	
		VGQ0330	Indicator Tube Holder	4	

Ref. No.		Part No.	Part Name & Description	Pcs / Set	Remarks
		VEP4053A	IR RECEIVER P.C.B. Unit		
			Integrated Circuit		
IC6501		μPC1373H		1	
			Diode		
D6501		PN313	Photo	1	
			Resistors		
R6501		ERD10TJ102	1K	1	
R6502		ERD10TJ120	12	1	
R6503		ERD10TJ154	150K	1	
			Capacitors		
C6501		ECEA1CK100	Electrolytic 16V 10	1	
C6502		ECEA1EKR47	Electrolytic 25V 0.47	1	
C6503		ECEA1CK100	Electrolytic 16V 10	1	
C6504		ECQP1472JZ	Mylar 100V0.0047	1	
C6505		ECQM1H183KZ	Mylar 50V 0.018	1	
C6506		ECEA1CK470	Electrolytic 16V 47	1	
			Transformer		
T6501		ELM7Q206A	Tuning	1	
			Miscellaneous		
		VKW0147	Filter for Remote Control	1	
		VSC0800	Shield Case	1	
		VSC0801	Shield Case	1	
		VSC0806	Shield Case	1	

Panasonic

MATSUSHITA ELECTRIC

Printed in Japan

ORDER NO. VRD-8206-099

Service Manual

AC Adaptor

Vol. 6

NV-B11-E/-B

SPECIFICATIONS

Power Source:	220, 240 V AC 50/60 Hz
Power Consumption:	50 W
Output:	12 V DC. 1.6 A
	15 V DC for battery charge
Weight:	2.6 kg
Dimensions:	146(W) × 92.5(H) × 240(D) mm

Weight and dimensions shown are approximate.
Specifications are subject to change without notice.

CAUTION: FOR USE WITH VIDEO TAPE RECORDER, MODEL NV-100.
WARNING: TO PREVENT FIRE OR SHOCK HAZARD, DO NOT EXPOSE THIS EQUIPMENT TO RAIN OR MOISTURE.

Panasonic

Matsushita Electric Trading Co., Ltd.
P.O. Box 288, Central Osaka Japan

This unit is an AC adaptor for the NV-100 Portable Video Recorder: for a power supply to the recorder and the colour video camera, and for recharging of the battery pack.

CAUTION: This unit is for use with video tape recorder, model NV-100.

WARNING: To prevent fire or shock hazard, do not expose this equipment to rain or moisture.

FEATURES

1. **TV/VTR Switch**
   When the VTR and the TV set are connected to this unit, TV/VTR switch enables you to watch TV normally or to view playback of video recording.
2. **Simultaneous power supply**
   This unit supplies power to the colour camera through the recorder NV-100.
3. **Voltage selector**
   This unit can also be used in other countries where voltages are different (220, 240 V AC: NV-B11) by setting the voltage selector to the local voltage.
4. **Battery pack can be recharged in 90 minutes. Simultaneous charging.**
   A battery pack in the battery compartment on the unit can be charged while at the same charging the battery pack in the recorder.

CONTENTS

SPECIFICATIONS ..... Cover
FUNCTION OF CONTROLS 6- 1
OPERATION 6- 2
BATTERY CHARGING 6- 2
DISASSEMBLY METHOD 6- 3
ELECTRICAL ADJUSTMENT PROCEDURES 6- 4
CIRCUIT BOARD LAYOUT 6- 6
AC ADAPTOR BLOCK DIAGRAM 6- 7
AC ADAPTOR SCHEMATIC DIAGRAM 6- 8
MAIN POWER SUPPLYC.B.A 6- 9
EXPLODED VIEWS 6-10
MECHANICAL REPLACEMENT PARTS LIST 6-10
ELECTRICAL REPLACEMENT PARTS LIST 6-11

FRONT

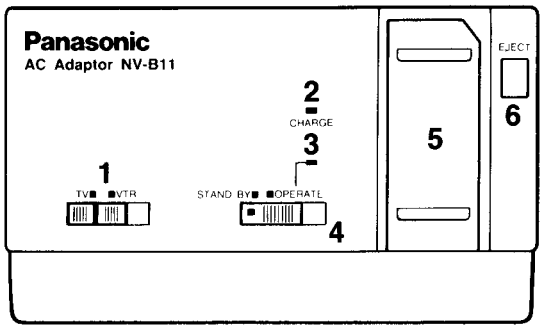

REAR

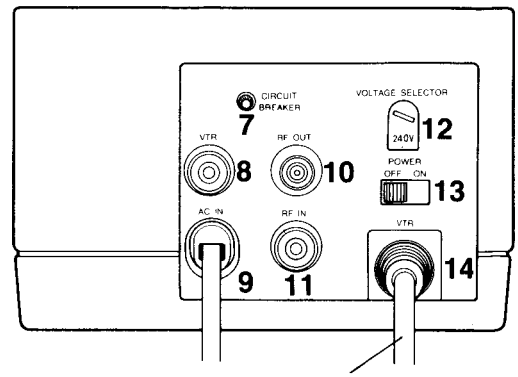

ADAPTOR CABLE to ADAPTER TERMINAL

FUNCTION OF CONTROLS

FRONT

1. **TV/VTR switch**
   VTR—To watch playback of video recording
   TV— To watch TV normally
2. **Charging Indicator Lamp**
   Lights up during charging of the battery pack, and extinguishes when charging is complete.
   Please refer to page 6.
3. **Pilot Lamp**
   When the Operation Switch is turned to "OPERATE" position, this lamp lights up.
4. **Operation Switch**
   Set to "OPERATE" to turn the unit on.
5. **Battery Compartment**
   When the battery pack is to be charged, insert it to this compartment.
6. **Battery Eject Button**
   When the Eject Button pushed, the battery pack is ejected.

REAR

7. **Circuit Breaker Button**
   The ADAPTOR Cable terminal will short-circuit if the terminal is mistakenly placed in contact with any conductive object other than the ADAPTOR terminal while the power cord is plugged in. The protective circuit will operate to break the circuit at this time, button will stick out and the Pilot Lamp will go off. To restore the unit to normal operation, connect the ADAPTOR Cable to the ADAPTOR terminal, wait one or two minutes, then depress this button.
8. **VTR Terminal**
   Connect it to RF OUT of the recorder.
9. **Power Cord**
   For connection to an ordinary power source.
10. **RF OUT Terminal**
    Connect it to TV.
11. **RF IN Terminal**
    Connect it to an aerial.
12. **Voltage Selector**
    Ensure that the selector is set at the same indication as the local mains voltage before plugging in the unit.

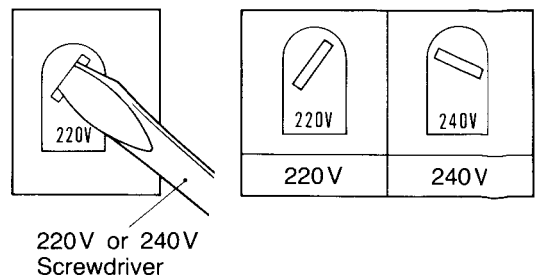

220V or 240V
Screwdriver

Note:
Power Switch must be off and Power Cord disconnected from mains prior to changing the voltage selector.

13. **POWER OFF/ON Switch**
    Switching on applies power to the unit. To switch off this unit completely, set to "OFF".
14. **ADAPTOR Cable**
    Connect it to ADAPTOR Terminal of the recorder.

OPERATION

■ To use as a power source

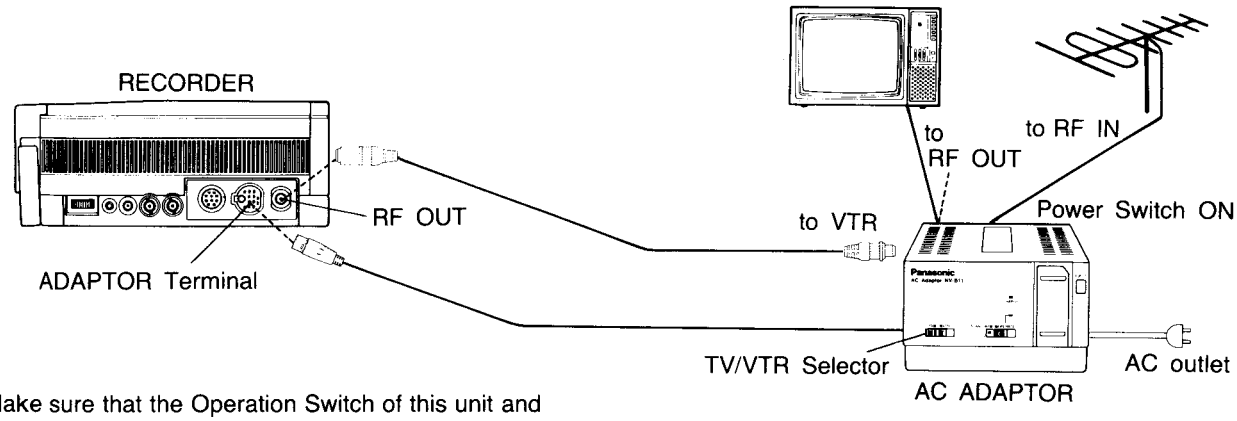

- Make sure that the Operation Switch of this unit and of the recorder are off, and that the Voltage Selector is adjusted to your local voltage.

1. Connect the DIN RF Cable to RF OUT of the recorder and VTR of the unit.
2. Connect the ADAPTOR Cable to ADAPTOR Terminal of the recorder.
3. Plug in the unit.
4. Switch Power OFF/ON to "ON".
5. Set the Operation Switch to "OPERATE". The Pilot Lamp will light up to indicate that the preparations for power supply are completed.
6. Set the TV/VTR Switch to "VTR" to view playback of video recording. Set the TV/VTR switch to "TV" to watch TV normally.
   - When the Operation Switch is set to "STANDBY", "TV" mode is automatically selected.

BATTERY CHARGING

1. To charge the battery pack of the recorder.

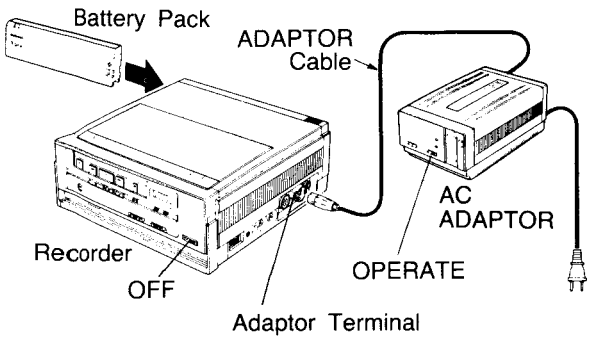

1. Insert the battery pack into the recorder and connect the ADAPTOR Cable on the unit to ADAPTOR Terminal.
2. Turn the unit on.
3. The Charging Indicator Lamp will light up and charging of the battery pack in the recorder will start.

- It is recommended to continue recharging for 3 or 4 hours after the lamp goes off (1.5 hours) to prolong the life of the battery pack.
- If the recorder is turned on during recharging, recharging will stop and the Charging Indicator Lamp will go off.

2. Charging the battery pack in the battery compartment.

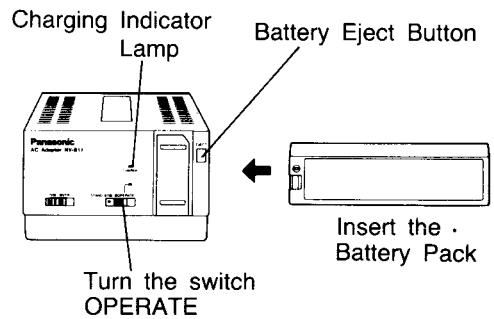

1. Insert the battery pack to the battery compartment.
2. Turn the unit on, and charging will start.

> The recharging time for two battery packs (one in the recorder and one being recharged in the AC ADAPTOR at the same time) is about twice the time required for one battery pack.

DISASSEMBLY METHOD

1. unscrew the 2 screws (A) and remove the handle. Then lift the top case and remove it.

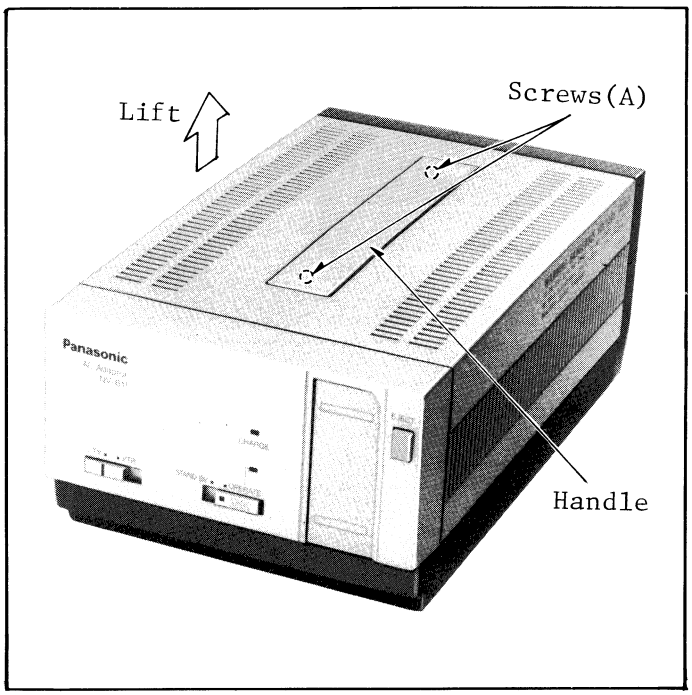

Fig. 1

2. Unscrew the 4 screws (B) and remove the bottom case.

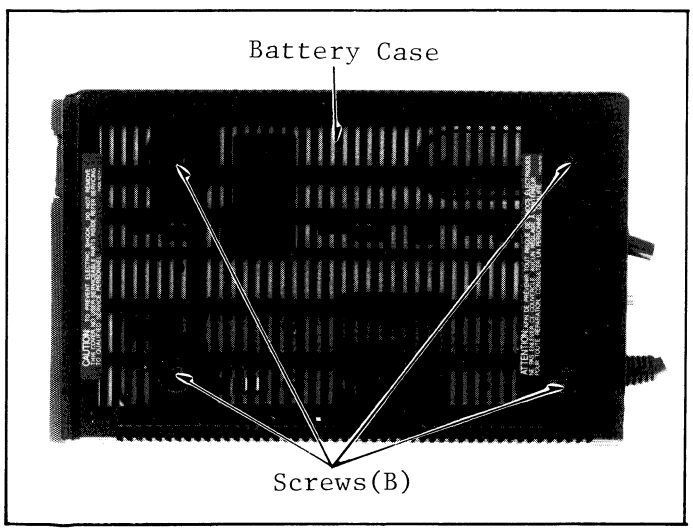

Fig. 2

3. Unscrew the scerw (C) and remove the battery case.

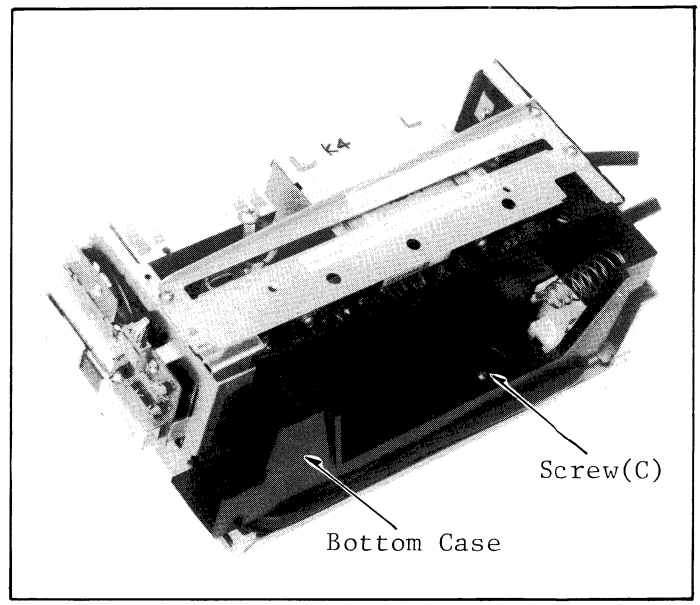

Fig. 3

ELECTRICAL ADJUSTMENT PROCEDURES

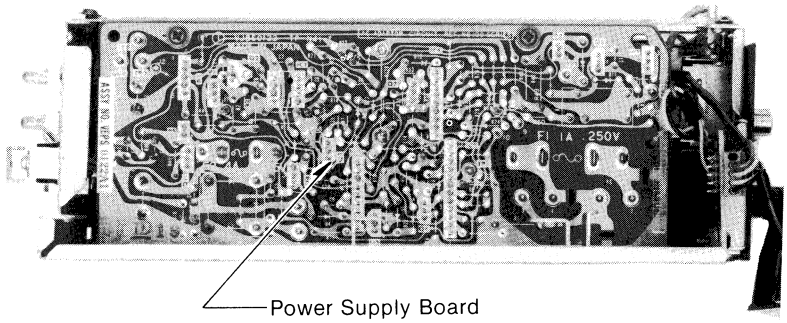

Fig. 4

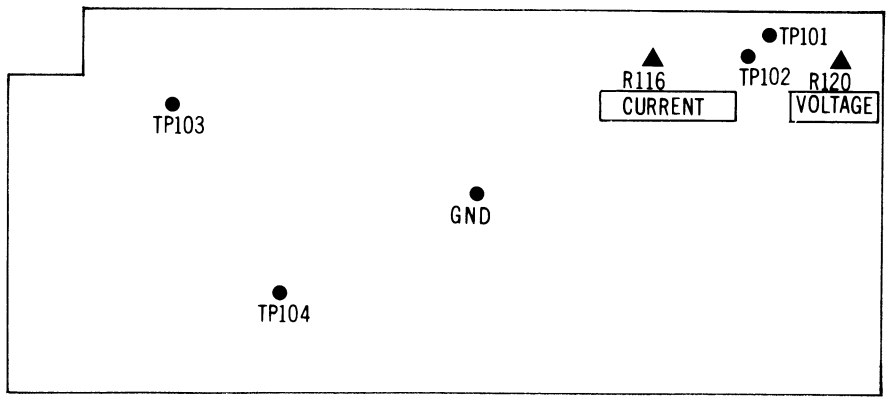

Fig. 5

This section provided complete electrical adjustment procedure which may be required for electronic circuits of MULTI-VOLTAGE AC ADAPTOR UNIT.

Test Equipment

To perform the electrical adjustment completely, the following equipments are required.

1. VTVM (Vacuum Tube Volt Meter) or DVM (Digital Volt Meter)
   Voltage Range: 0.001 - 50V
2. Dual-Trace Oscilloscope
   Voltage Range: 0.005 - 50V/div.
   Frequency Range: DC - 10MHz
   Probes: 10:1 or 1:1
3. DC Currentmeter
   Current Range: 0 - 10A
4. Plastic Tip Driver

1. Charge Current (1.6A) Adjustment

Test Point: D120
Adjustment: R116

1. Do not connect the Multi-connector to the deck.
2. Connect the DC Currentmeter and battery as shown below.

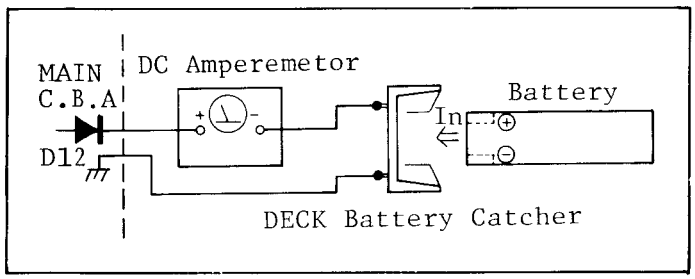

Fig. 6

The output voltage of the battery should be about 10.6V DC.
It can be made as following process.

1) Discharge the battery by using the VCR which has already had performed the Under Cut Adjustment.
   Refer to NV-8420 Service Manual Vol. 2 (Electrical Adjustment Procedures).
2) The VCR automatically turn into the STOP mode because the Under Cut function works.
3) At this time the output voltage of the battery is approx. 10.6V DC.

3. Connect the scope to TP102 on the Main P.C. Board.
4. Adjust Charge Current Adjustment (R116) so that the current is 1.6A 0.02A.
5. Confirm that the voltage at TP102 is High during the adjustment.

2. Width of Hysteresis Loop Adjustment

Test Point: TP102
Adjustment: R120

1. Do not connect Multi-connector to the deck.
2. Connect a 50kΩ variable resistor (1/4W) to parallel with R106 on the Main P.C. Board as shown below.

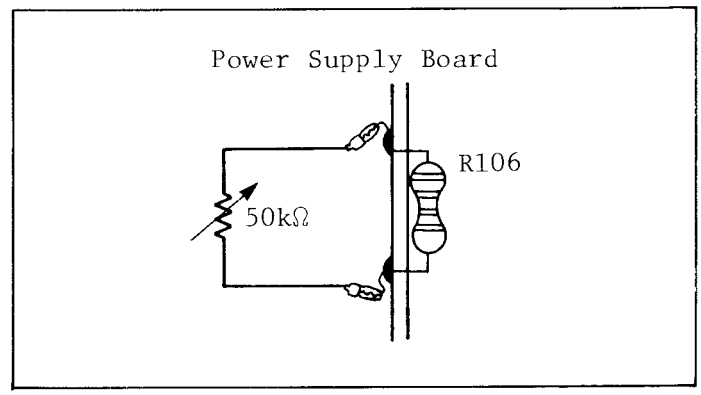

Fig. 7

3. Short both end of R119 on the Main P.C. Board.
4. Turn the Power on switch and adjust a 50kΩ variable resistor so that the voltage of Battery Catcher is +14.10V.
5. Connect the scope to TP102 on the Main P.C. Board and confirm that the voltage is "High" (+15.0V ± 1V).
6. Adjust Charge Volt Adjustment (R120) just to the point that the DC voltage is changed "Low" to "High" on the oscilloscope.

CIRCUIT BOARD LAYOUT

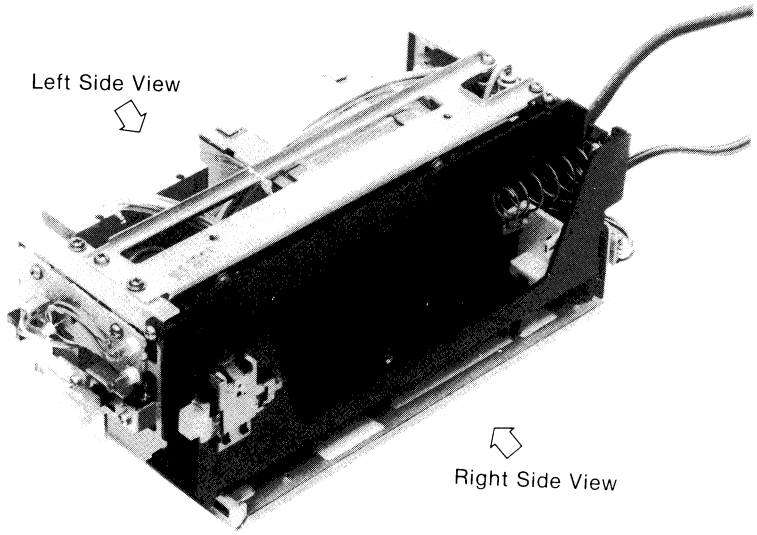

RIGHT SIDE VIEW

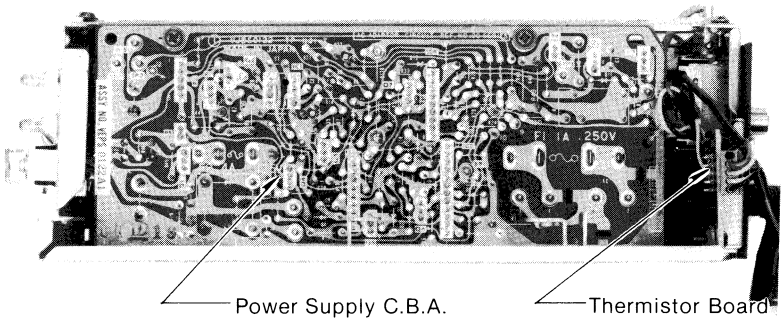

LEFT SIDE VIEW

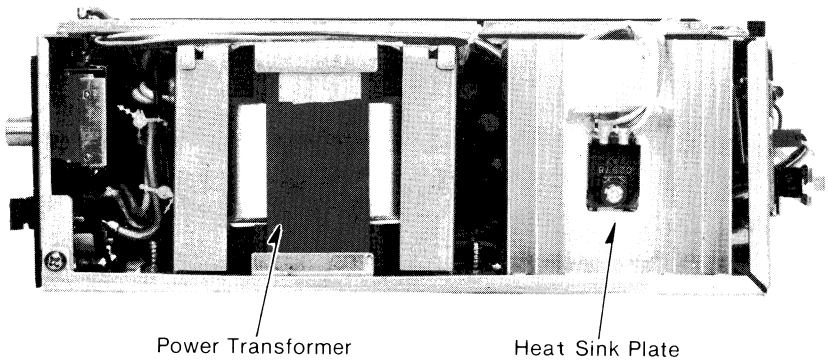

AC ADAPTOR BLOCK DIAGRAM

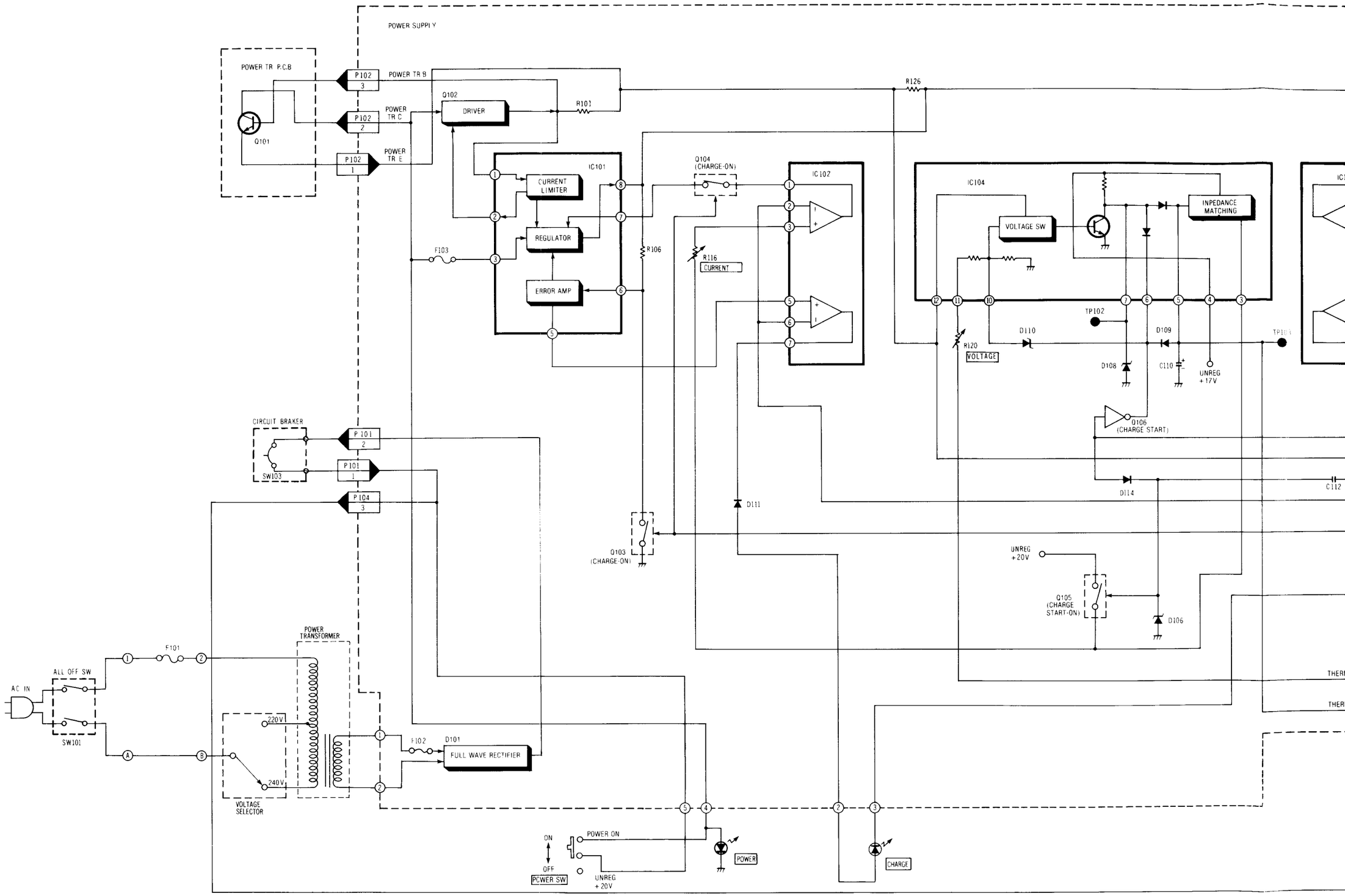

AGRAM

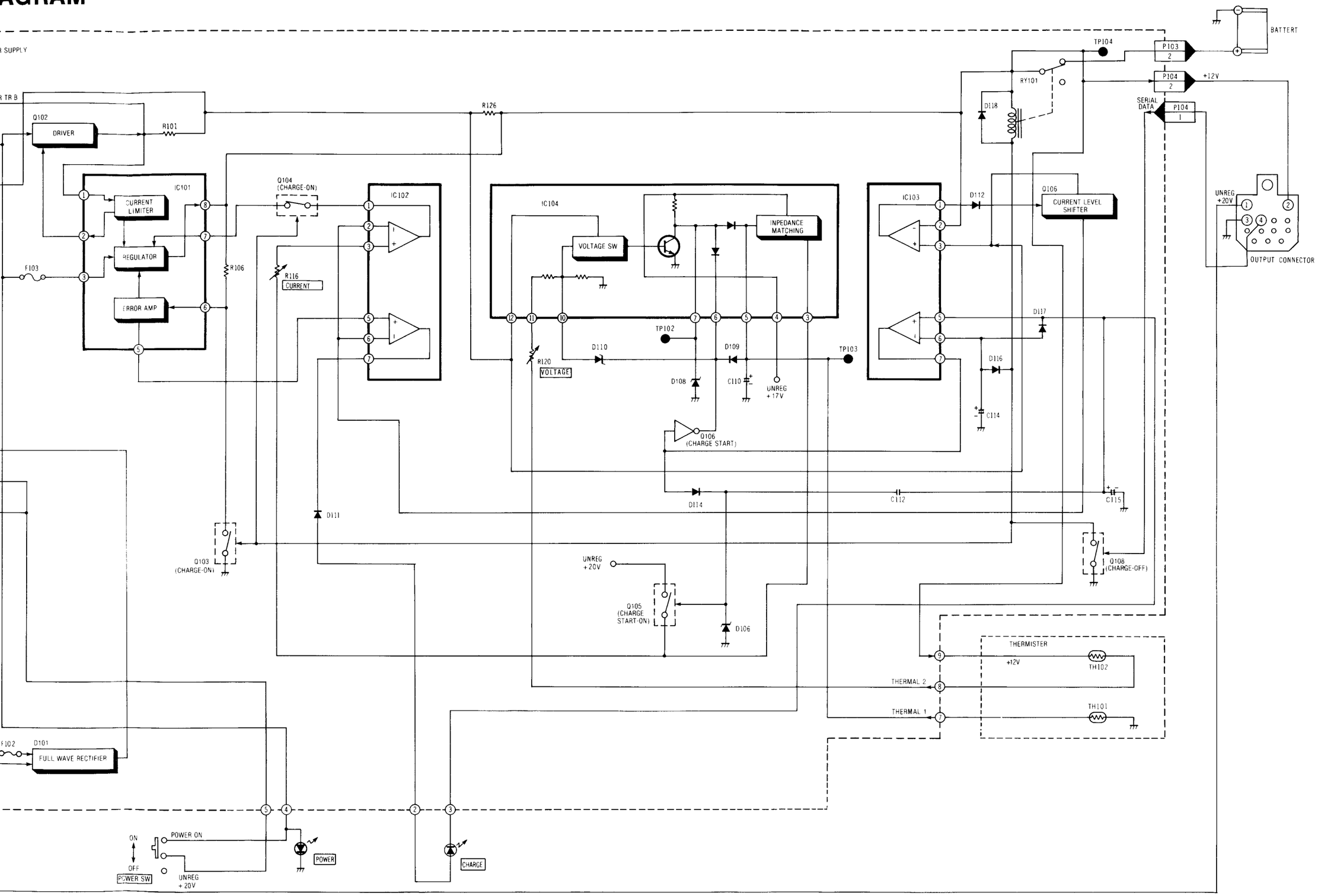
R SUPPLY
R TR B
Q102
DRIVER
R101
IC101
CURRENT LIMITER
REGULATOR
ERROR AMP
F103
R106
Q104 (CHARGE-ON)
R116 CURRENT
IC102
R126
IC104
VOLTAGE SW
INPEDANCE MATCHING
R120 VOLTAGE
D110
TP102
D109
TP103
D108
C110
UNREG +17V
Q106 (CHARGE START)
D114
C112
C115
D111
Q103 (CHARGE-ON)
UNREG +20V
Q105 (CHARGE START-ON)
D106
IC103
D112
Q106
CURRENT LEVEL SHIFTER
D117
D116
C114
TP104
RY101
D118
P103 2
P104 2
P104 1
BATTERT
+12V
SERIAL DATA
UNREG +20V
OUTPUT CONNECTOR
Q108 (CHARGE-OFF)
THERMISTER
+12V
TH102
TH101
THERMAL 2
THERMAL 1
F102
D101
FULL WAVE RECTIFIER
ON
OFF
POWER SW
POWER ON
UNREG +20V
POWER
CHARGE

AC ADAPTOR SCHEMATIC DIAGRAM

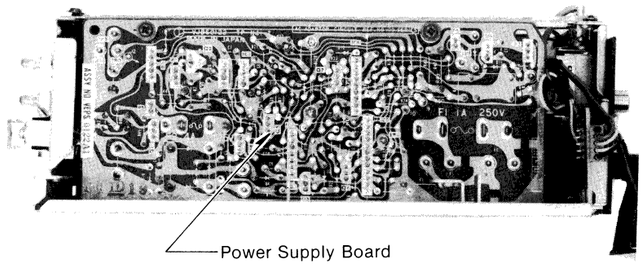

Power Supply Schematic	
Q101	F-1
Q102	E-3
Q103	D-4
Q104	E-4
Q105	E-5
Q106	E-7
Q107	D-7
Q108	D-9
IC101	D-3
IC102	E-5
IC102	C-6
IC103	D-7
IC104	D-6

VCR0054

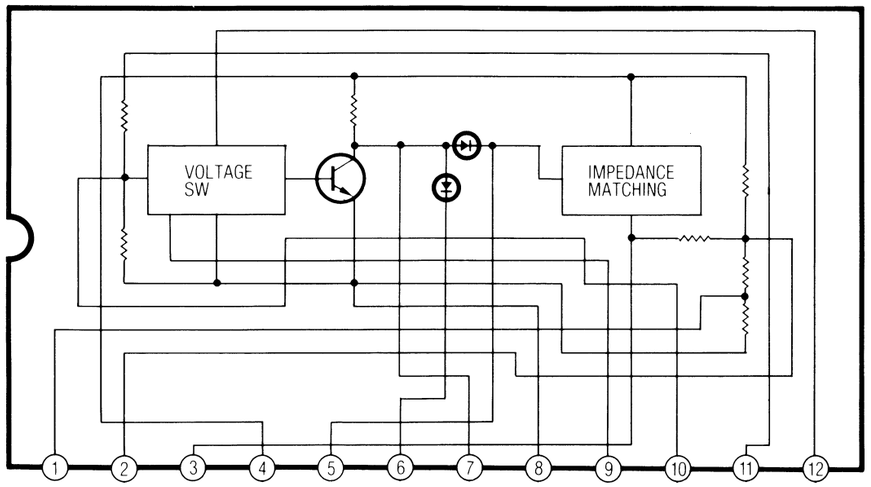

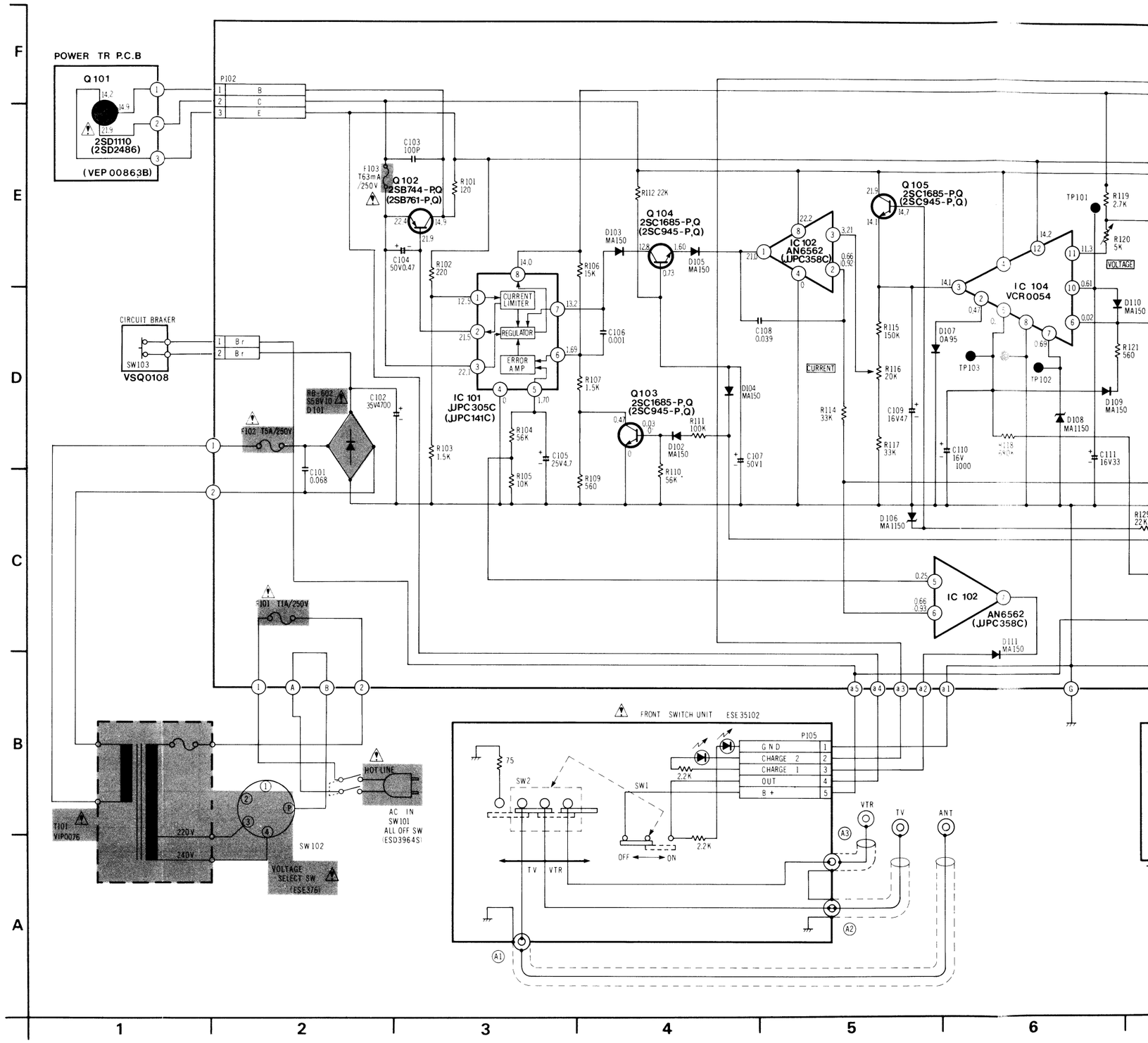

C ADAPTOR SCHEMATIC DIAGRAM

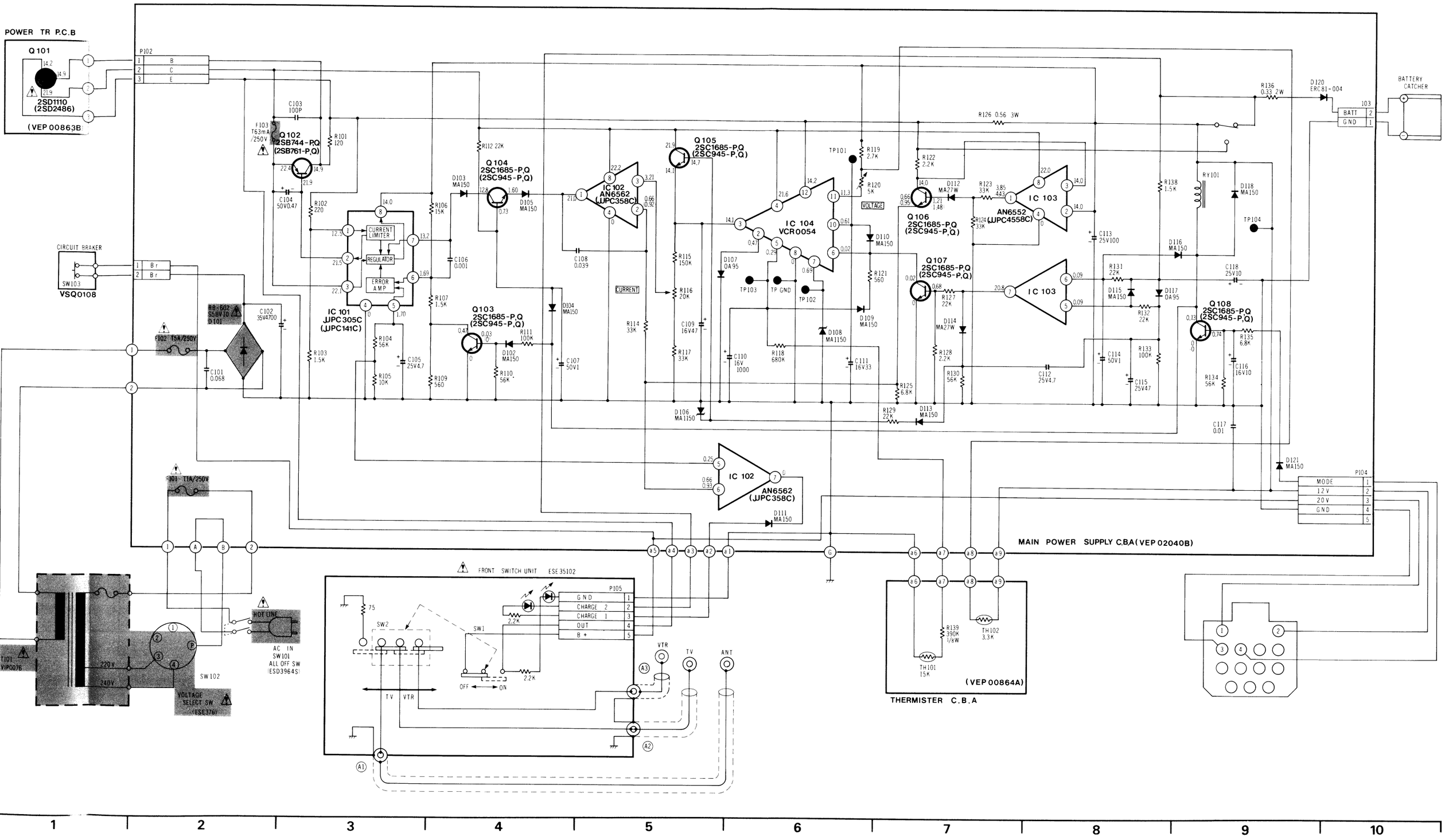

MAIN POWER SUPPLY C.B.A (VEP02040B)

Power Supply P.C.B	
Q102	B-2
Q103	B-2
Q104	B-2
Q105	B-3
Q106	B-4
Q107	B-3
Q108	B-3
IC101	B-1
IC102	B-3
IC103	B-3
IC104	B-4

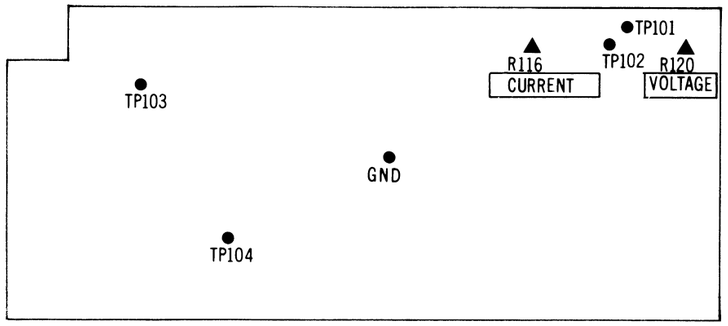

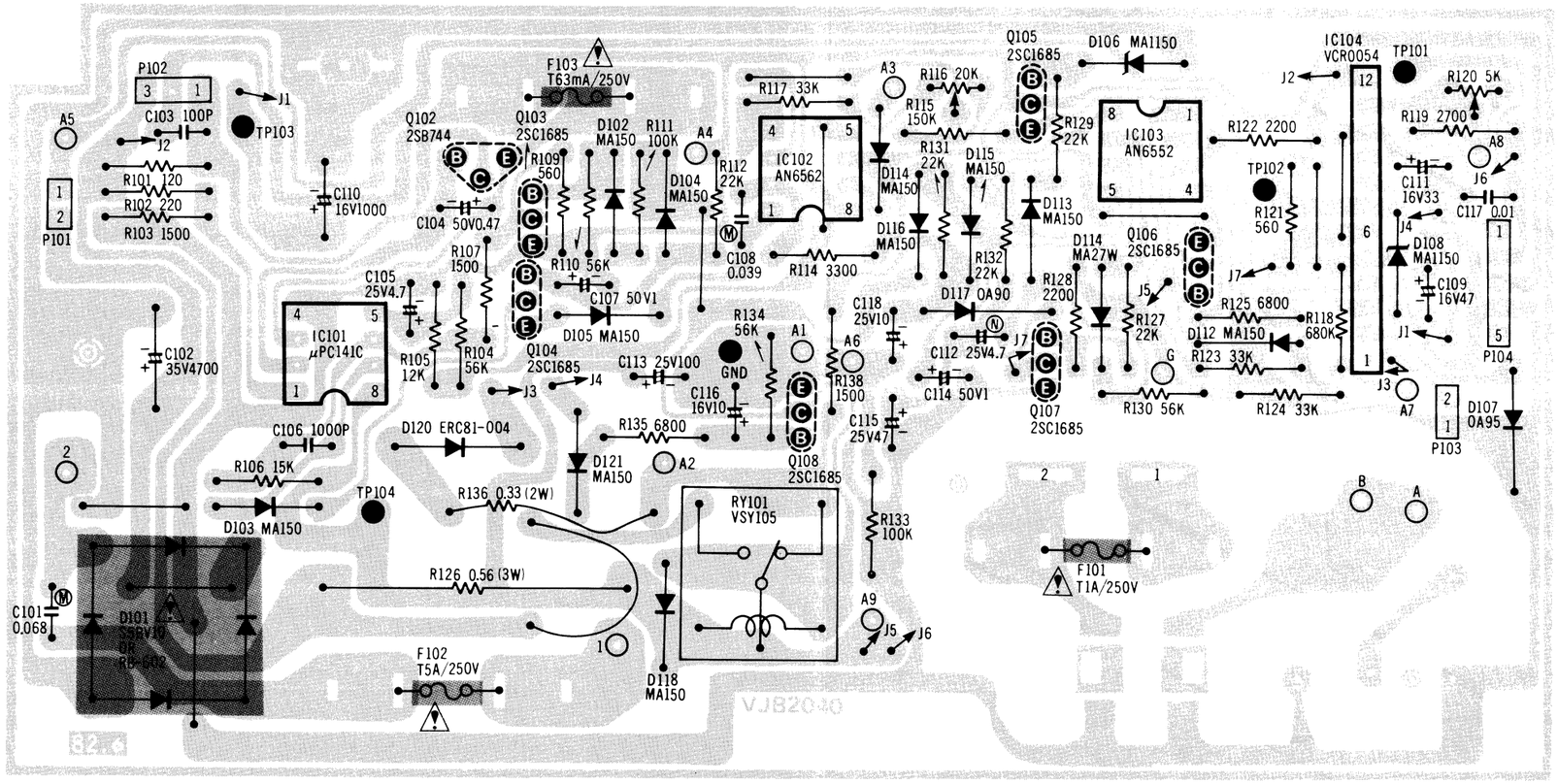

P101

1	CIRCUIT BRAKER
2	CIRCUIT BRAKER

P102

1	B
2	C
3	E

P103

1	GND
2	BATTERY

P104

1	MODE
2	12V
3	20V
4	GND

B

A

1 2 3 4

FRONT SWITCH UNIT

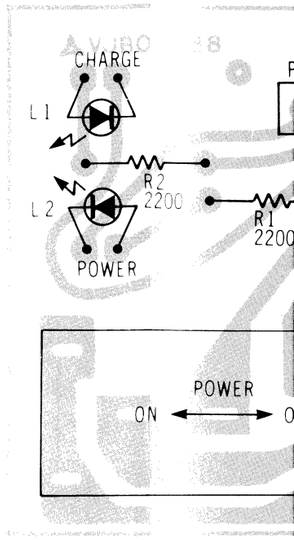

POWE

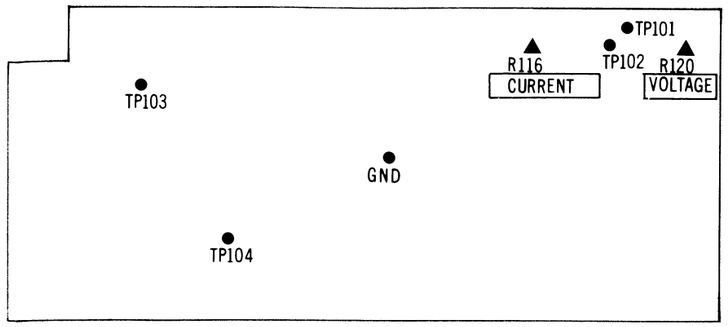

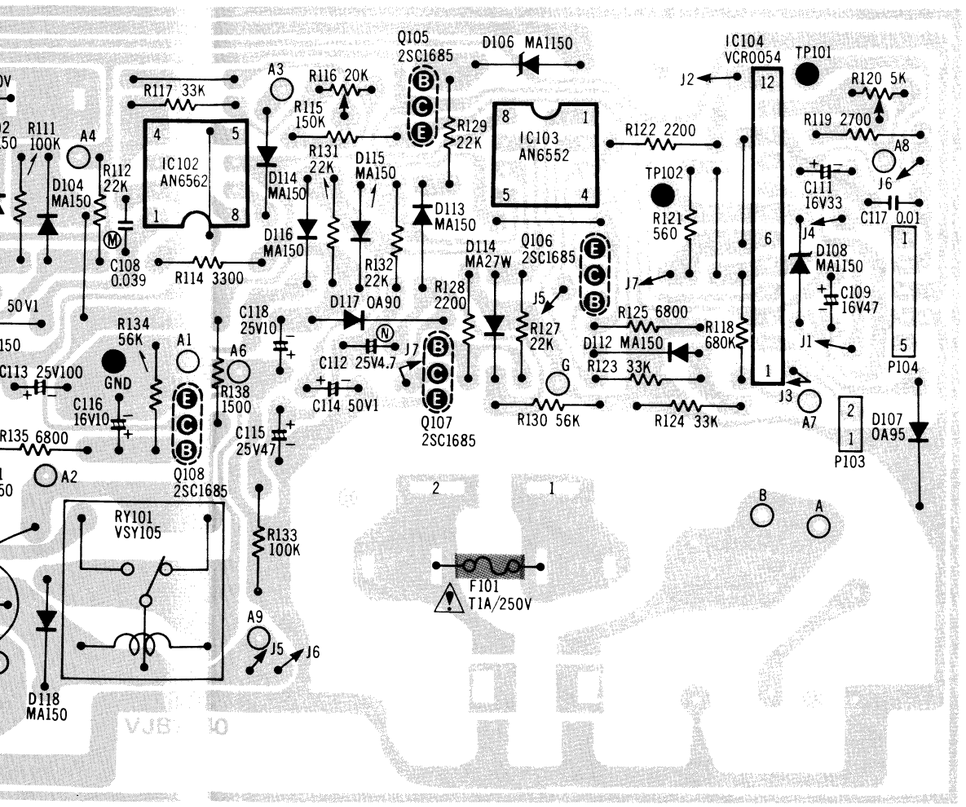

P103	
1	GND
2	BATTERY

P104	
1	MODE
2	12V
3	20V
4	GND

3 4

FRONT SWITCH UNIT (ESE35102)

P105	
1	GND
2	CHG 2
3	CHG 1
4	OUT
5	B +

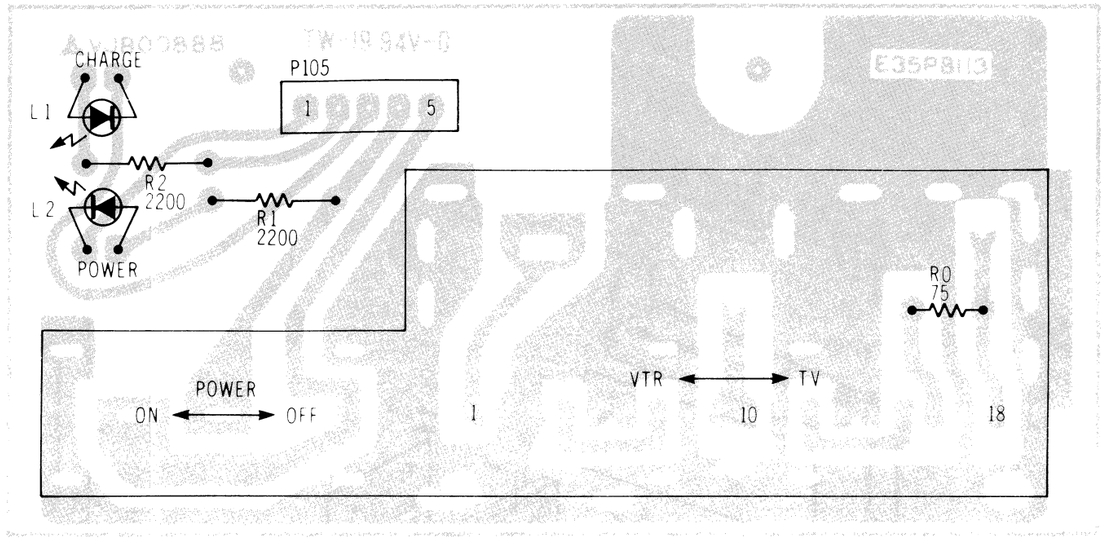

POWER TR C.B.A (VEP00863B)

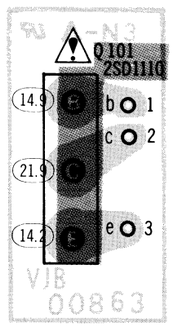

THERMISTOR C.B.A (VEP00864A)

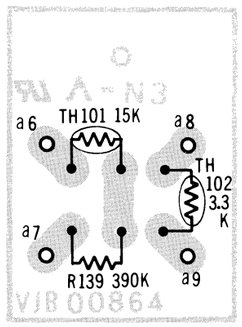

EXPLODED VIEWS ① *AC Adaptor Section*

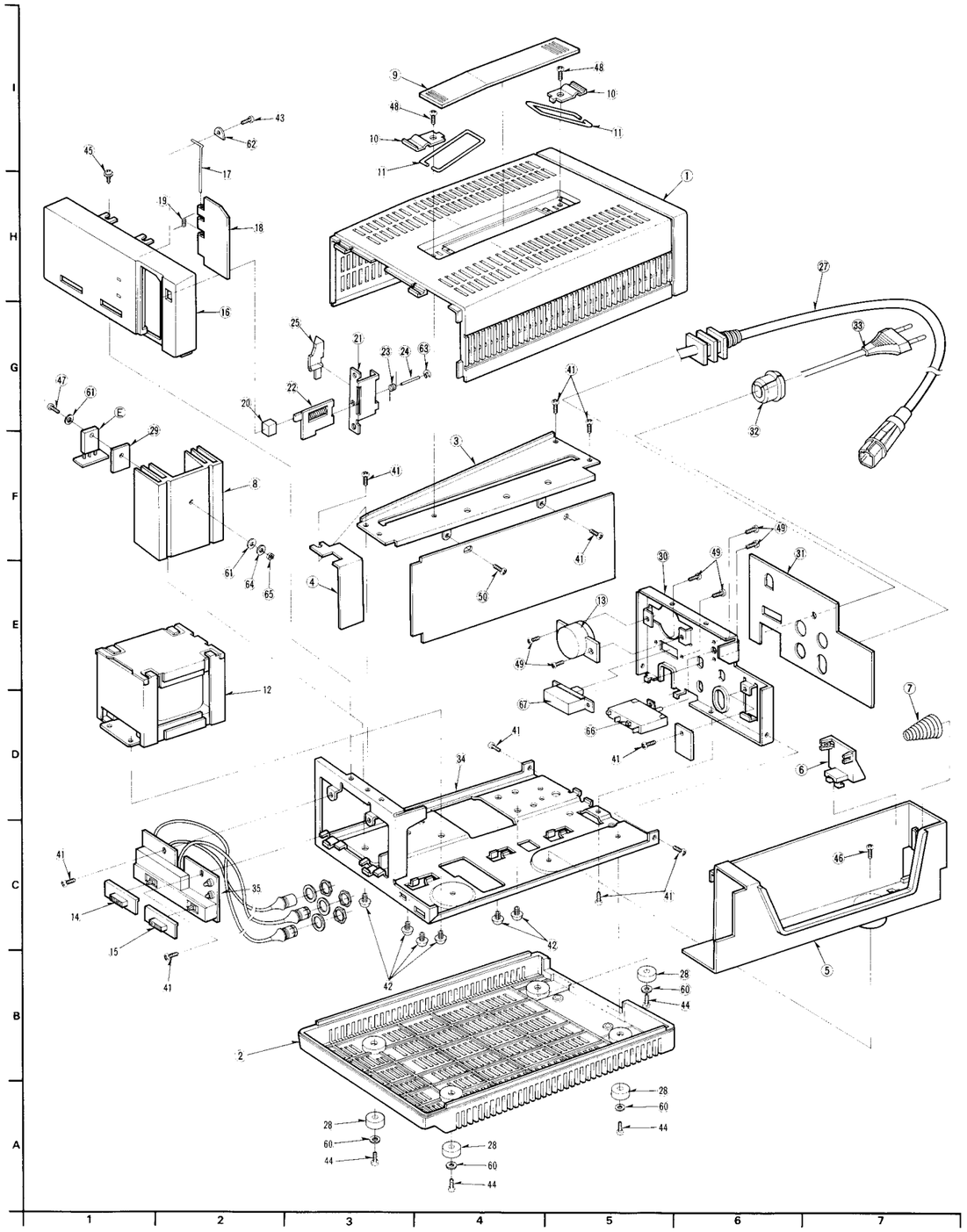

② *Packing Parts & Accessories Section*

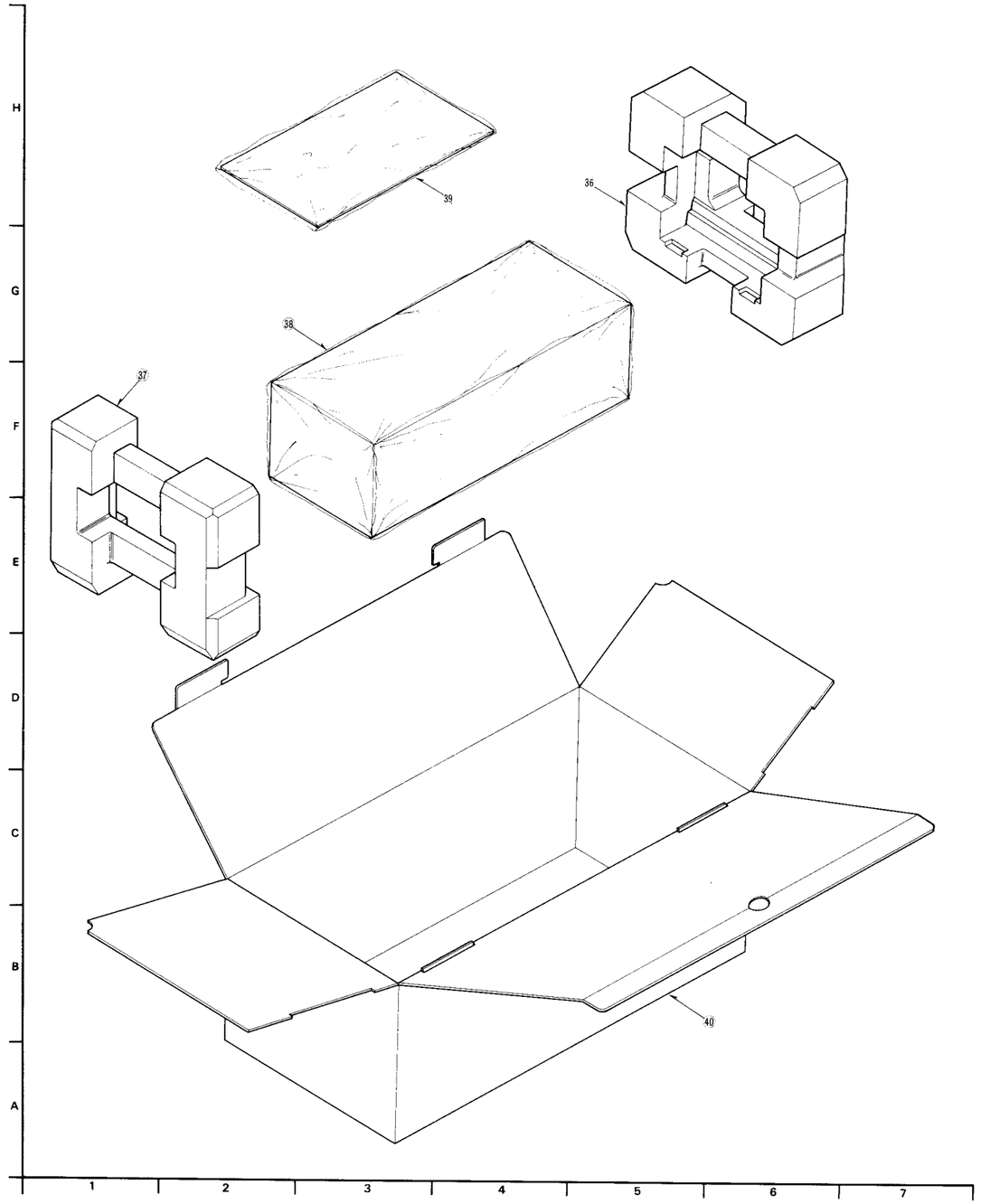

MECHANICAL

Model No. NV-B11

Notes:
1. • Be sure to make your ord

Ref. No.	Part N
1 (1)	VGP0523
2 (1)	VKU0170
3 (1)	VMA5777
4 (1)	VMZ0315
5 (1)	VKM0125
6 (1)	VJF0106
7 (1)	VMB0969
8 (1)	VSC0684
9 (1)	VKH0069
10 (1)	VMA5776
11 (1)	VMA5775
12 (1)	VTF0076
13 (1)	ESE376
14 (1)	VGT0244
15 (1)	VGT0271
16 (1)	VGP0716
17 (1)	VMS2149
18 (1)	VKF0115
19 (1)	VMB0981
20 (1)	VGU0319
21 (1)	VMA5790
22 (1)	VMM0099
23 (1)	VMB0990
24 (1)	VMS2150
25 (1)	VML1360
27 (1)	VJA0175
28 (1)	VKA0023
29 (1)	S-34
30 (1)	VMA6023
31 (1)	VGN1956
32 (1)	VJF0017
33 (1)	VJA0111
	VJA0112
34 (1)	VMK0214
35 (1)	ESE35102
36 (2)	VPN0728
37 (2)	VPN0727
38 (2)	VPF0165
39 (2)	VQF0847
	VQF0848
40 (2)	VPG1148
	VPG1149
41 (1)	XTV3+6FS
42 (1)	XTT4+6FS
43 (1)	XTV3+6J
44 (1)	XSB3+10F
45 (1)	XTW3+6L
46 (1)	XTV3+8FS
47 (1)	XSN3+14F
48 (1)	XSB4+8FC
49 (1)	XYN3+F8S
50 (1)	XTW3+6M
	XSB3+6FZ
60 (1)	XWG3E10F
61 (1)	XWG3FC
62 (1)	XWT3

② Packing Parts & Accessories Section

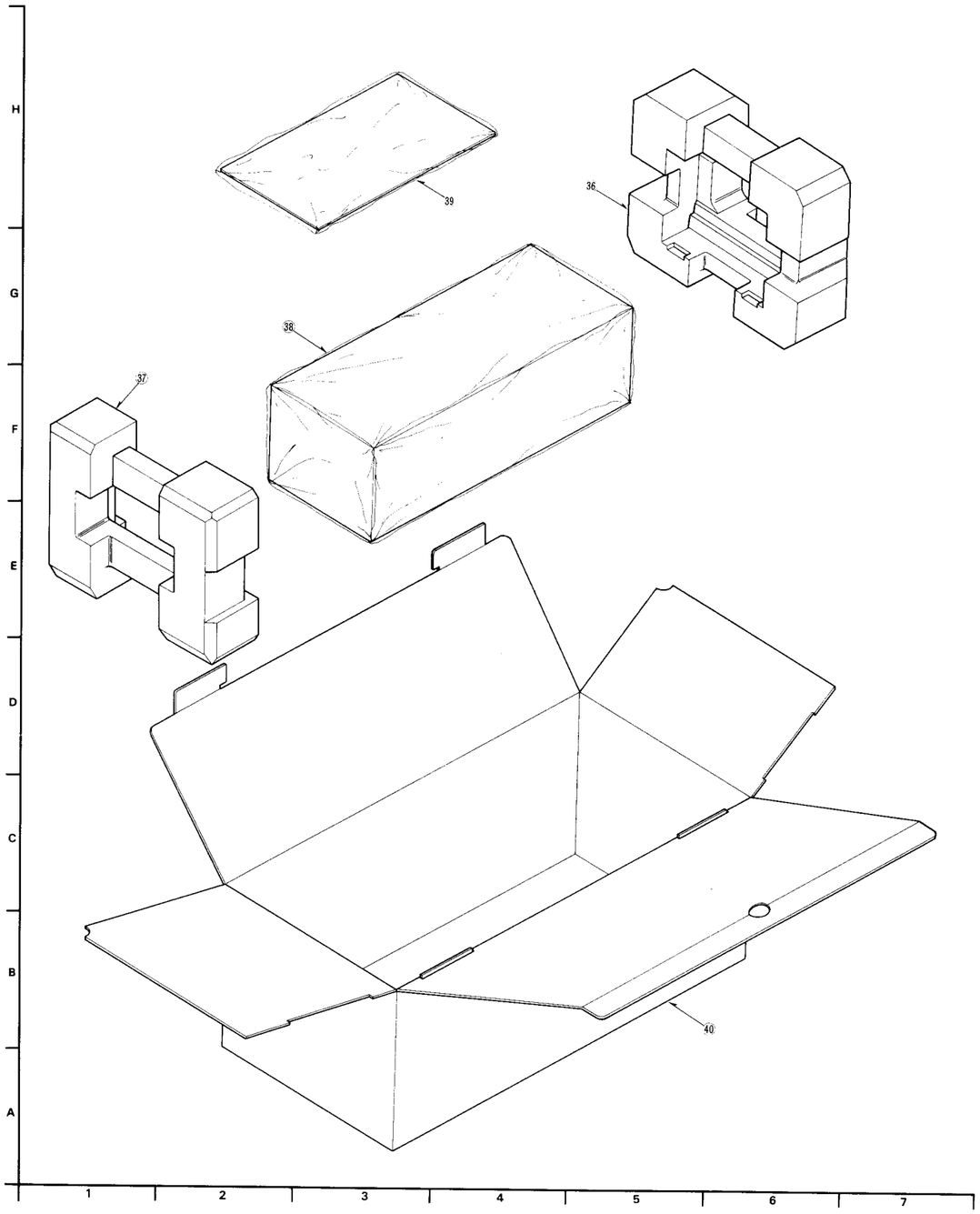

MECHANICAL REPLACEMENT PARTS LIST

Model No. NV-B11

Notes:
1. • Be sure to make your orders of replacement parts according to this list.

Ref. No.	Part No.	Part Name & Description	Pcs / Set	Remarks
1 (1)	VGP0523	Top Panel	1	
2 (1)	VKU0170	Bottom Panel	1	
3 (1)	VMA5777	Handle Angle	1	
4 (1)	VMZ0315	Barrier	1	NV-B11E ⚠
5 (1)	VKM0125	Battery Case	1	
6 (1)	VJF0106	Battery Catcher	1	
7 (1)	VMB0969	Battery Push Spring	1	
8 (1)	VSC0684	Heat Sink Plate	1	
9 (1)	VKH0069	Handle	1	
10 (1)	VMA5776	Handle Mount Angle (B)	2	
11 (1)	VMA5775	Handle Mount Angle (A)	2	
12 (1)	VTF0076	Power Transformer	1	⚠
13 (1)	ESE376	Voltage Selector	1	⚠
14 (1)	VGT0244	TV/VTR Select Switch Knob	1	
15 (1)	VGT0271	Power Switch Knob	1	
16 (1)	VGP0716	Front Panel	1	
17 (1)	VMS2149	Battery Door Shaft	1	
18 (1)	VKF0115	Battery Door	1	
19 (1)	VMB0981	Battery Door Spring	1	
20 (1)	VGU0319	Eject Button	1	
21 (1)	VMA5790	Eject Angle	1	
22 (1)	VMM0099	Eject Rod	1	
23 (1)	VMB0990	Eject Return Spring	1	
24 (1)	VMS2150	Lock Lever Shaft	1	
25 (1)	VML1360	Lock Lever	1	
27 (1)	VJA0175	Multi Connector	1	
28 (1)	VKA0023	Rubber Foot	4	
29 (1)	S-34	Mica Seat	1	
30 (1)	VMA6023	Rear Frame	1	
31 (1)	VGN1956	Rear Decoration	1	
32 (1)	VJF0017	AC Cord Bushing	1	⚠
33 (1)	VJA0111	AC Cord	1	NV-B11E ⚠
	VJA0112	AC Cord	1	NV-B11B ⚠
34 (1)	VMK0214	Chassis Frame	1	
35 (1)	ESE35102	Front Switch Unit	1	⚠
36 (2)	VPN0728	Cushion (Rear)	1	
37 (2)	VPN0727	Cushion (Front)	1	
38 (2)	VPF0165	Polyethylene Bag	1	
39 (2)	VQF0847	Fan Bag	1	NV-B11E ⚠
	VQF0848	Fan Bag	1	NV-B11B ⚠
40 (2)	VPG1148	Packing Case	1	NV-B11E
	VPG1149	Packing Case	1	NV-B11B
		Screws		
41 (1)	XTV3+6FS		10	
42 (1)	XTT4+6FS		7	
43 (1)	XTV3+6J		3	
44 (1)	XSB3+10FZS		4	
45 (1)	XTW3+6L		1	
46 (1)	XTV3+8FS		1	
47 (1)	XSN3+14FCS		1	
48 (1)	XSB4+8FCS		2	
49 (1)	XYN3+F8S	with spring washer	2	
50 (1)	XTW3+6M		1	
	XSB3+6FZS		4	
		Washers		
60 (1)	XWG3E10FX		4	
61 (1)	XWG3FC		2	
62 (1)	XWT3		1	

Ref. No.	Part No.	Part Name & Description	Pcs / Set	Remarks
63 (1)	XUC2FTK	Retaining Ring (E-Type)	1	
64 (1)	NO 70		1	
65 (1)	NO 50		1	
66 (1)	VSQ0108	Circuit Braker		⚠
	YEK10869	Circuit Braker Housing		
67 (1)	ESD39648	All Off Switch		⚠
	VMB0425	Leaf Lever Spring		
	VMX0472	Knob Spacer		
	VGN1944	Rated Label		NV-B11E ⚠
	VGN1943	Rated Label		NV-B11B ⚠
	VPF3	Polyethylene Bag (AC Cord)		
	VHN0011	Plastic Revet	2	
			4	

ELECTRICAL REPLACEMENT PARTS LIST

Model No. NV-B11

Notes:
1. • Be sure to make your orders of replacement parts according to this list.
2. IMPORTANT SAFETY NOTICE
   Components identified by ⚠ have special characteristics important for safety.
   When replacing any of these components, use only the original ones.
3. Unless otherwise specified,
   All resistors are in OHMS (Ω), 1/8W ± 5% carbon. K=1,000Ω, M=1,000KΩ.
   All capacitors are in MICROFARADS (μF), ± 10% P=μμF.

Ref. No.		Part No.	Part Name & Description	Pcs / Set	Remarks
		VEP2040A	Main Power Supply P.C.B. Unit*	1	NV-B11E
		VEP2040B		1	NV-B11B
		VEP00863B	Power TR. P.C.B. Unit	1	
		VEP00864A	Sub-Thermistor P.C.B. Unit	1	
			Integrated Circuits		
IC101		μPC305C		1	or μPC141C
IC102		AN6562		1	or μPC358C
IC103		AN6552		1	or μPC4558C
IC104		VCR0054		1	
			Transistors		
Q102		2SB744		1	(P,Q) or 2SB761(P,Q)
Q103-108		2SC1685		6	(P,Q) or 2SC945(P,Q)
			Diodes		
D101		S5VB10	Rectifire Stack	1	or RB602 ⚠
D102-105		MA150		4	
D106		MA1150	Zenner	1	
D107		OA95		1	
D108		MA1150	Zenner	1	
D109-D111		MA150		3	
D113		MA150		1	
D114		MA27W		1	
D115,116		MA150		2	
D117		OA95		1	
D118		MA150			
D120		ERC81-004	Schottky	1	
D121		MA150		1	
			Resistors		
R101		ERD25TJ121	120	1	
R102		ERD25TJ221	220	1	
R103		ERD25TJ152	1.5K	1	
R104		ERD25TJ563	56K	1	
R105		ERD25TJ123	12K	1	
R106		ERD25TJ153	15K	1	
R107		ERD25TJ152	1.5K	1	
R109		ERD25TJ561	560	1	
R110		ERD25TJ563	56K	1	
R111		ERD25TJ104	100K	1	
R112		ERD25TJ223	22K	1	
R114		ERD25TJ332	3.3K	1	
R115		ERD25TJ154	150K	1	
R116		EVN50AA00B24	Variable 20K	1	
R117		ERD25TJ333	33K	1	
R118		ERD25TJ684	680K	1	
R119		ERD25TJ272	2.7K	1	
R120		EVN50AA00B53	Variable 5K	1	
R121		ERD25TJ561	560	1	
R122		ERD25TJ222	2.2K	1	
R123,124		ERD25TJ333	33K	2	
R125		ERD25TJ682	6.8K	1	
R126		ERF3AKR56	Cement 3W 500K	1	
R127		ERD25TJ223	22K	1	
R128		ERD25TJ222	2.2K	1	
R129		ERD25TJ223	22K	1	
R130		ERD25TJ563	56K	1	
R131,132		ERD25TJ223	22K	2	
R133		ERD25JT104	100K	1	
R134		ERD25TJ563	56K	1	
R135		ERD25TJ682	6.8K	1	
R136		ERX2ANJR33	Metal Oxide 2W 0.33	1	
R137		ERC12ZGK275	Solid 1/2W 270K	1	
R138		ERD25TJ152	1.5K	1	
			Capacitors		
C101		ECQM1H683KZ	Mylar 50V 0.068	1	
C102		ECEA35R472	Electrolytic 35V 4700	1	
C103		ECKF1H101KC	Ceramic 50V 100P	1	
C104		ECEA1HSR47	Electrolytic 50V 0.47	1	
C105		ECEA1ES4R7	Electrolytic 25V 4.7	1	
C106		ECKF1H102KB	Ceramic 50V 1000P	1	
C107		ECEA1HS010	Electrolytic 50V 1	1	
C108		ECQM1H393KZ	Mylar 50V 0.039	1	
C109		ECEA1CS470	Electrolytic 16V 47	1	
C110		ECEA16V102	Electrolytic 16V 1000	1	
C111		ECEA1CS330	Electrolytic 16V 33	1	
C112		ECEA1EN4R7	Non-Polar 25V 4.7	1	
C113		ECEA1ES101	Electrolytic 25V 100	1	
C114		ECEA1HS010	Electrolytic 50V 1	1	
C115		ECEA1ES470	Electrolytic 25V 47	1	
C116		ECEA1CS100	Electrolytic 16V 10	1	
C117		ECKF1H103ZF	Ceramic 50V 0.01	1	
C118		ECEA1ES100	Electrolytic 25V 10	1	
			Fuses		
F101		XBA2C10TR0C	T1A/250V	1	⚠
F102		XBA2C50TR0C	T5A/250V	1	⚠
F103		XBA2C063TR0C	T63mA/250V	1	⚠
			Connectors		
P101		VJP1141	2P	1	
P102		VJP1142	3P	1	
P103		VJP1141	2P	1	
P104		VJP1143	5P	1	
			Miscellaneous		
RY101		VY105-1		1	
TP101-104		VJH23		4	
TP GND		VJH23		1	
		VMZ0429	Fuse Cover		NV-B11B ⚠
		XYE3+EF6F		1	

Panasonic

MATSUSHITA ELECTRIC

Printed in Japan

ORDER NO. VRD-8206-099

Service Manual

Wired Remote Control

Vol. 7

NV-A13-E

SPECIFICATIONS

Weight:	180 g
Dimensions:	62(W) × 14(H) × 101(D) mm
Cable Length:	Approx. 5 m

Weight and dimensions shown are approximate.

Specifications are subject to change without notice.

Panasonic

Matsushita Electric Trading Co., Ltd.
P.O. Box 288, Central Osaka Japan

REMOTE CONTROL UNIT

The Control Unit NV-A13 is provided with the Portable Video Recorder NV-100, allowing you to operate the recorder from as far away as 5 meters. Simply plug the control unit cable connector into the remote control terminal on the recorder. Make sure that the power switch on both the power source and recorder are ON before operating the remote control unit.

CONTENTS

SPECIFICATIONS.....Cover

REMOTE CONTROL UNIT.....7-1

CONTROLS AND THEIR FUNCTION.....7-2

BLOCK DIAGRAM.....7-2

WIRED REMOTE CONTROL SCHEMATIC DIAGRAM.....7-3

WIRED REMOTE CONTROL UNIT.....7-4

EXPLODED VIEW.....7-5

1.Wired Remote Control Section.....7-5

2.Packing Parts Section.....7-5

MECHANICAL REPLACEMENT PARTS LIST.....7-6

ELECTRICAL REPLACEMENT PARTS LIST.....7-6

CONTROLS AND THEIR FUNCTION

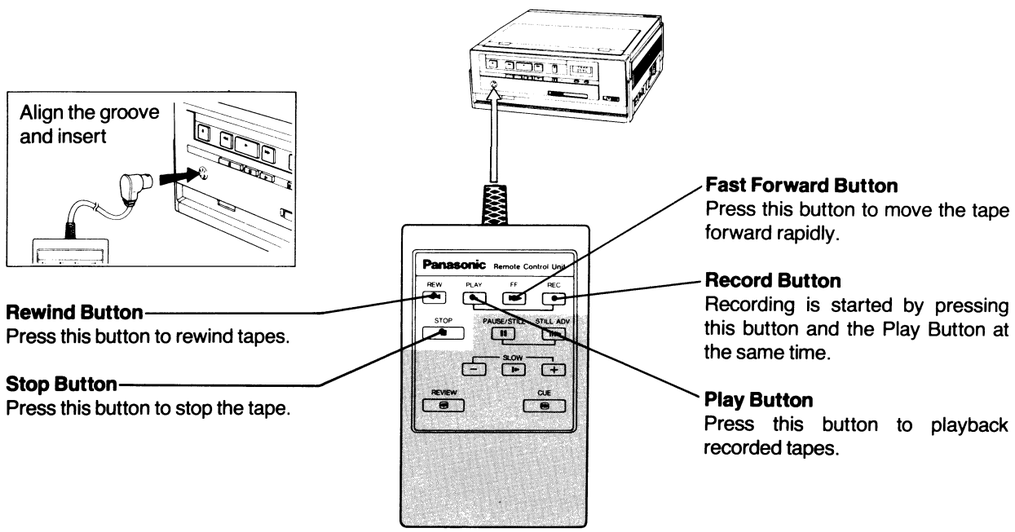

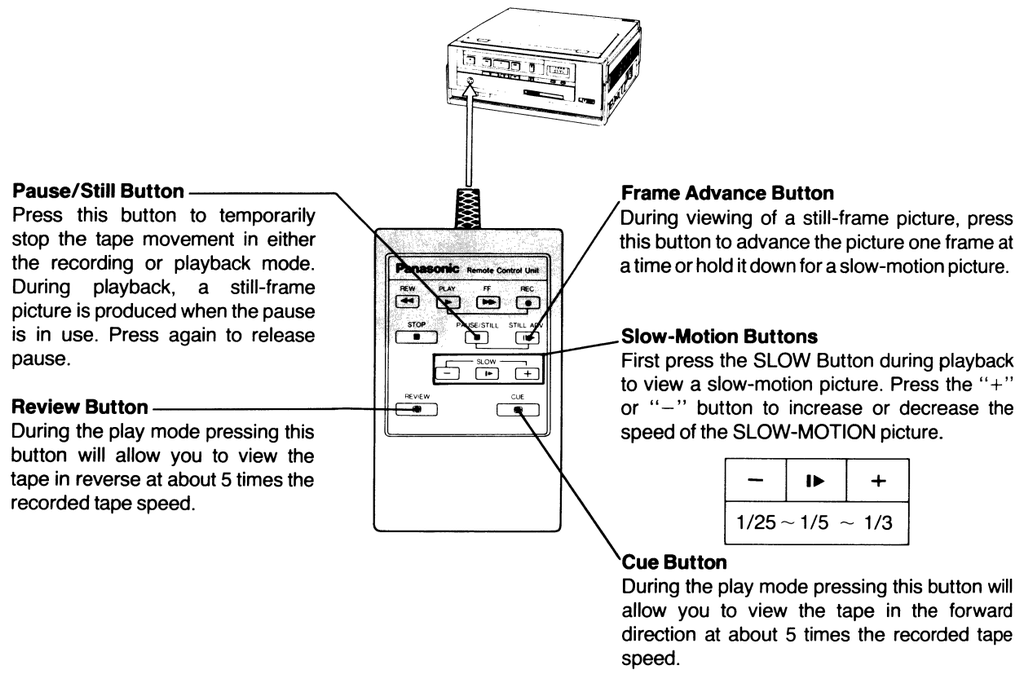

WIRED REMOTE CONTROL BLOCK DIAGRAM

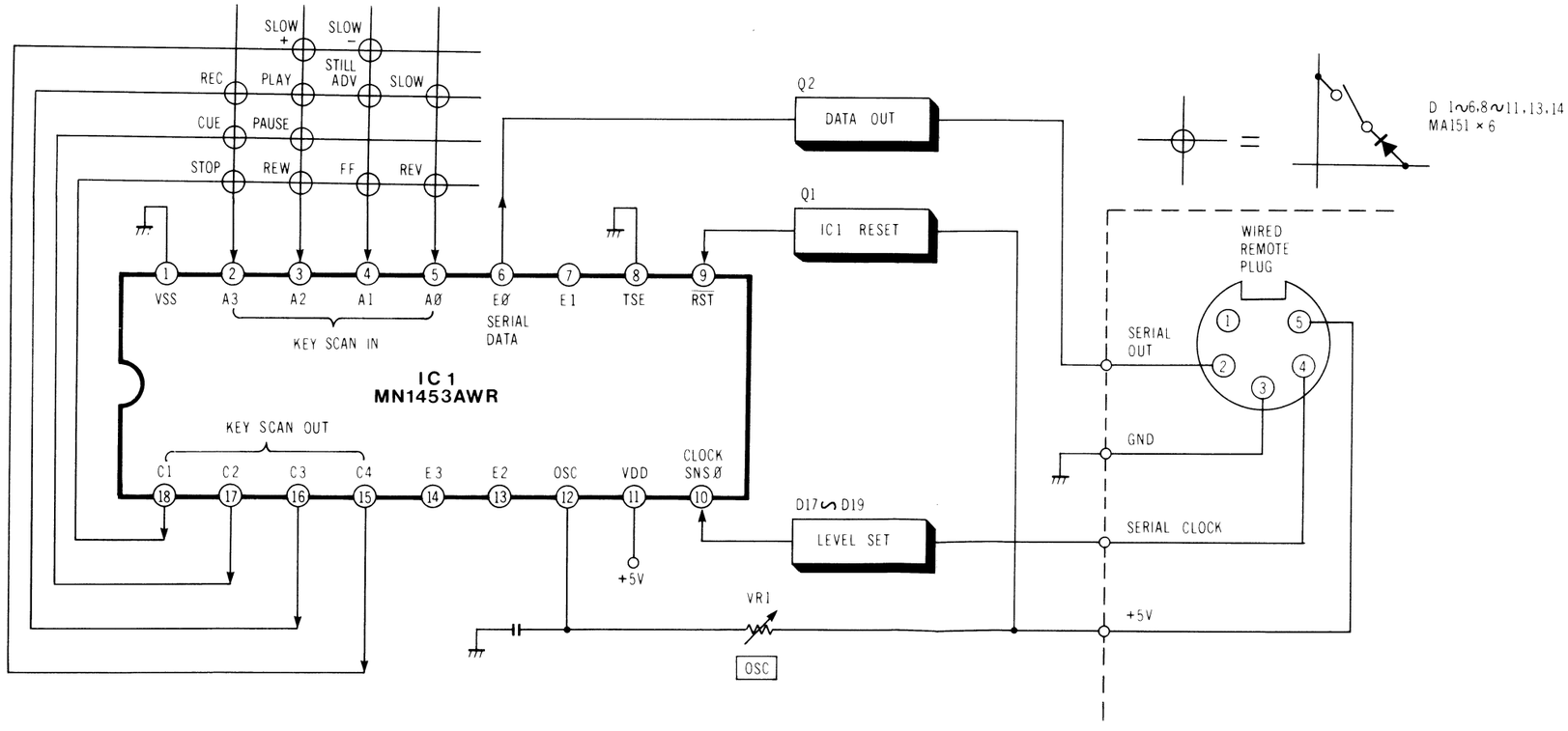

WIRED REMOTE CONTROL SCHEMATIC DIAGRAM

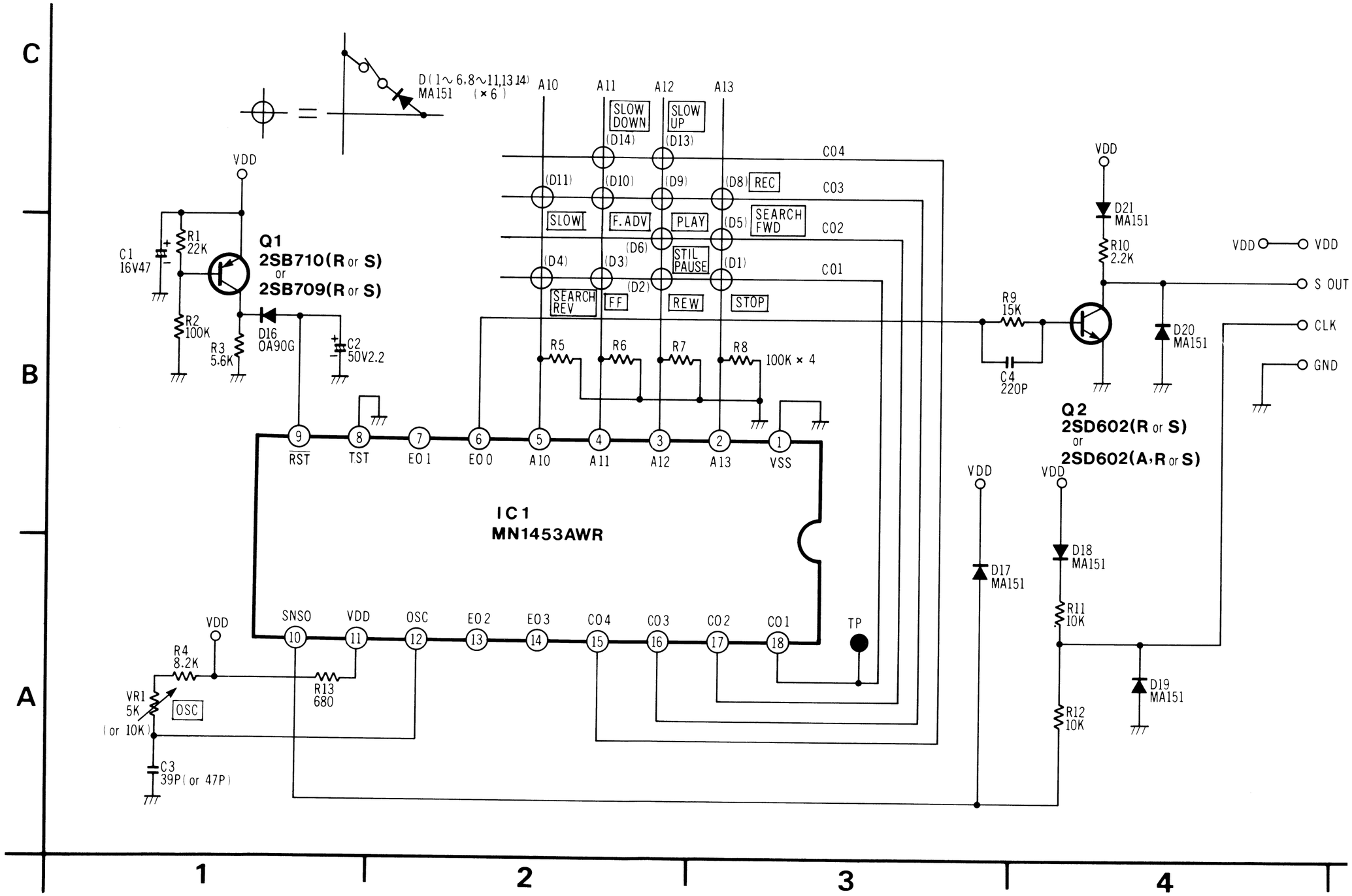

WIRED REMOTE CONTROL UNIT

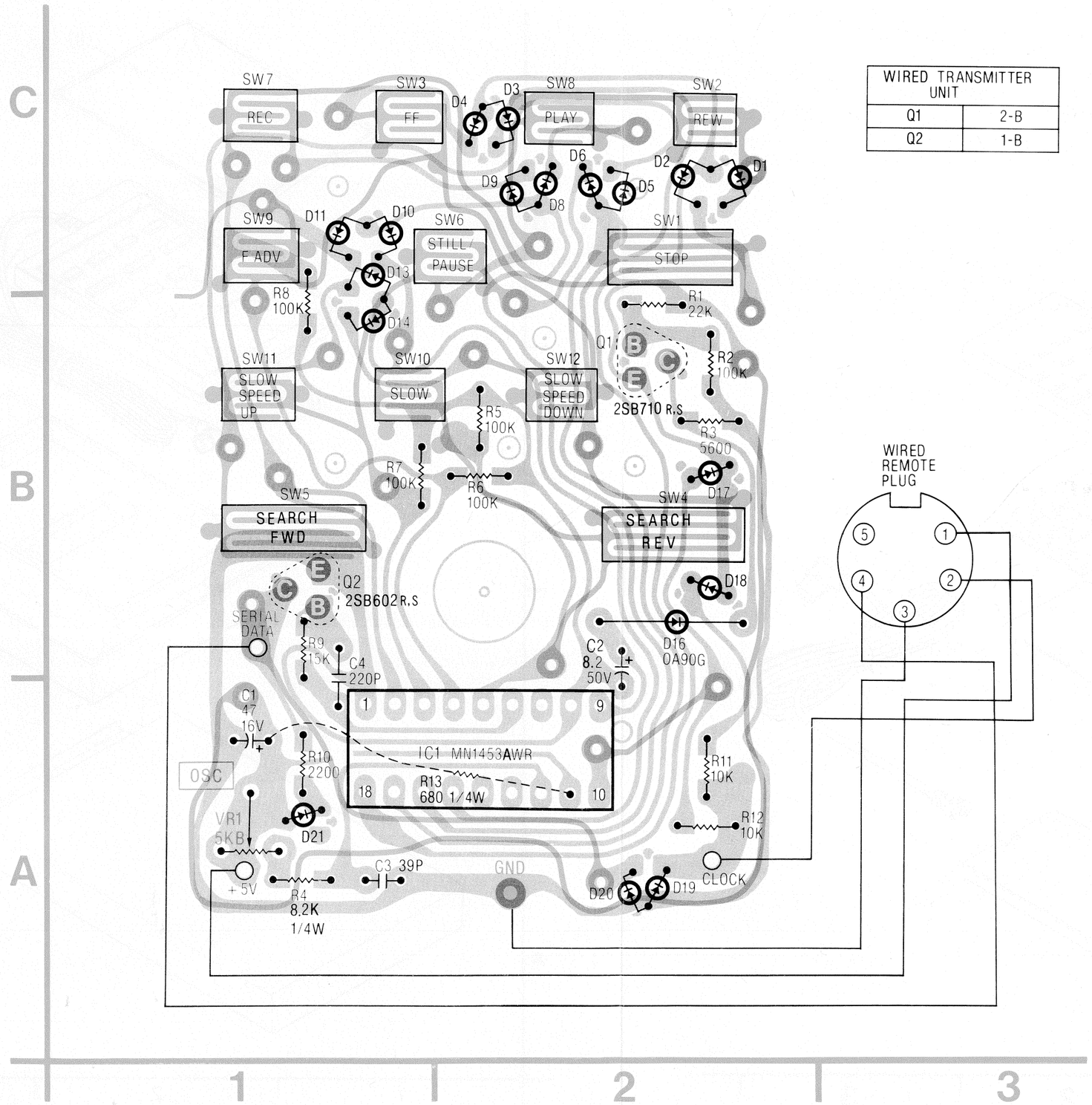

WIRED TRANSMITTER UNIT	
Q1	2-B
Q2	1-B

EXPLODED VIEW ① *Wired Remote Control Section*

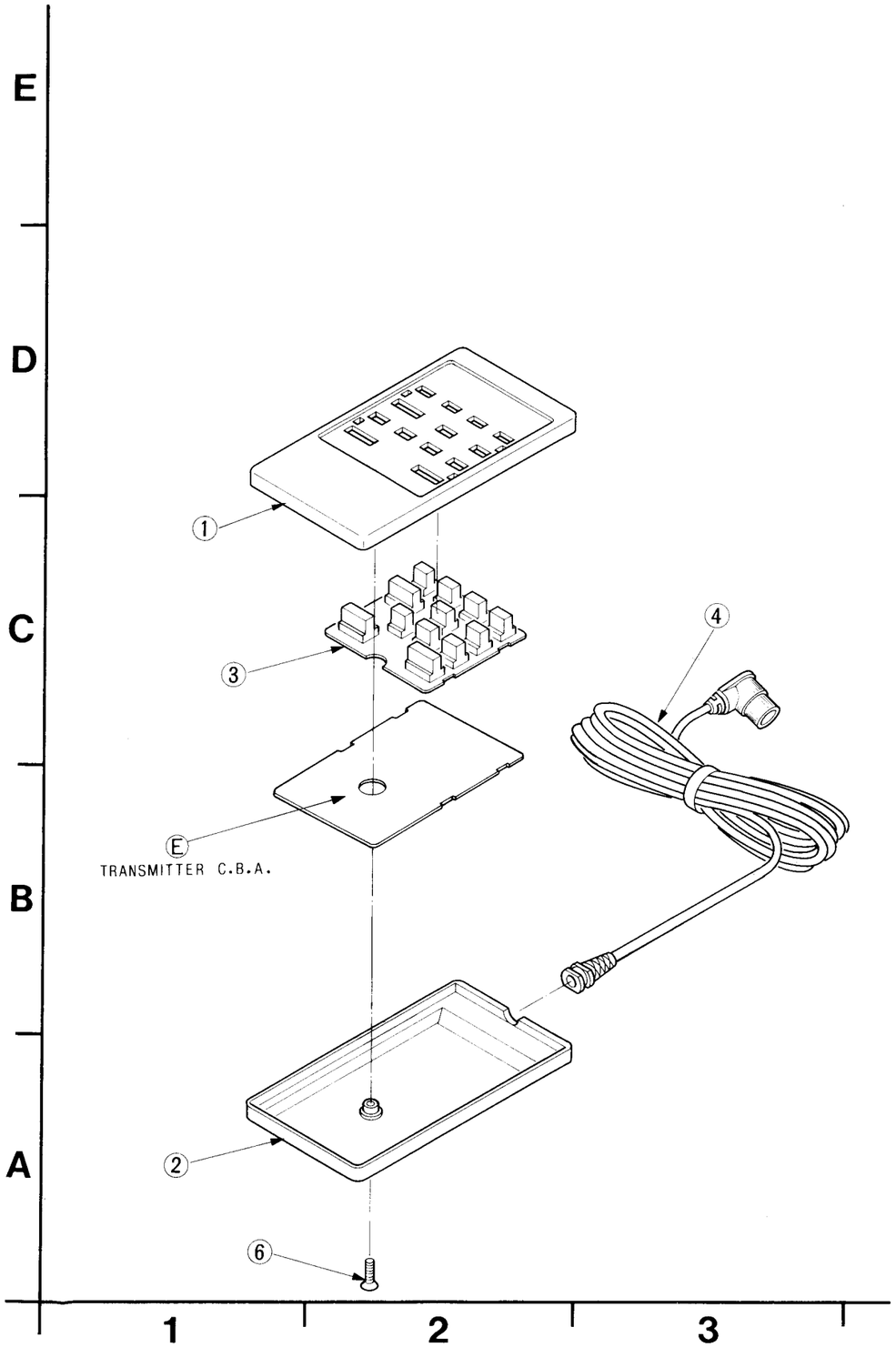

② *Packing Parts Section*

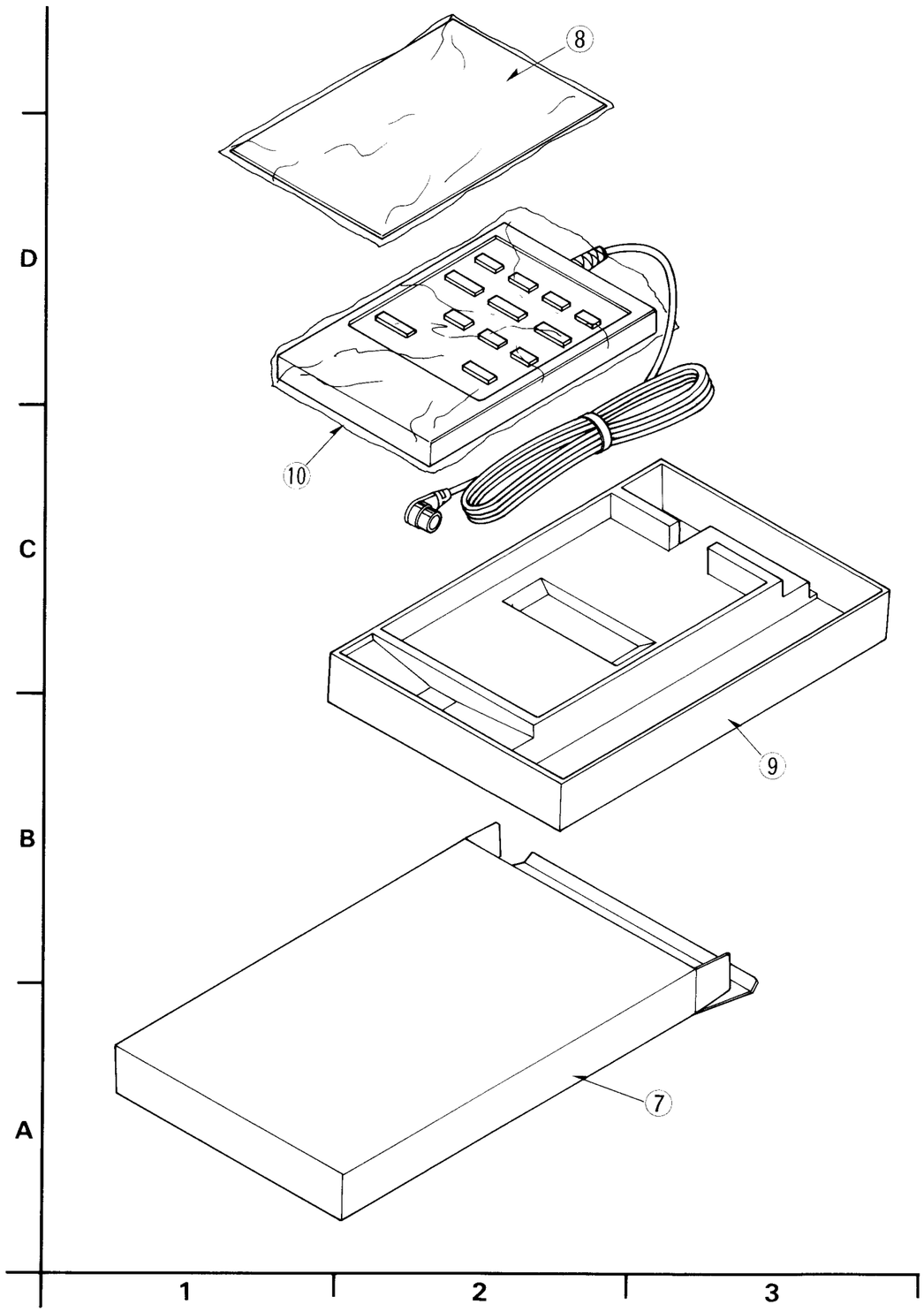

MECHANICAL REPLACEMENT PARTS LIST

Model No. NV-A13-E

Notes:
1. * Be sure to make your orders of replacement parts according to this list.

Ref. No.	Part No.	Part Name & Description	Pcs / Set	Remarks
1	VYK0452	Top Case	1	
2	VYK0453	Bottom Case	1	
3	VCU0664	Rubber Plate Contact	1	
4	VEC0305	Remote Control Cable	1	
6	XSS26+10FC	Screw	1	
7	VPK0161	Packing Case	1	
8	VQF0910	Fan Bag	1	
9	VPN0819	Cushion	1	
10	XZB10X22BOS	Polyethylene Bag	1	

ELECTRICAL REPLACEMENT PARTS LIST

Model No. NV-A13-E

Notes:
1. * Be sure to make your orders of replacement parts according to this list.
2. IMPORTANT SAFETY NOTICE
   Components identified by ⚠ have special characteristics important for safety.
   When replacing any of these components, use only the original ones.
3. Unless otherwise specified.
   All resistors are in OHMS (Ω), 1/8W ± 5% carbon. K=1,000Ω, M=1,000KΩ
   All capacitors are in MICROFARADS (μF), ± 10% P=μμF.

Ref. No.	Part No.	Part Name & Description	Pcs / Set	Remarks
		Transmitter P.C.B. Unit	1	
IC1	MN1453AWR	Integrated Circuit	1	
D16	OA90G	Diode	1	
		Capacitors	1	
C1	ECEA1CK470	Electrolytic 10V 47μ	1	
C2	ECEA1HK2R2	Electrolytic 50V 2.2μ	1	
C3	ECCF1H390JV	Ceramic 39P	1	
C4	ECKF1H221KB	Ceramic 220P	1	
R13	ERD25TJ681	Resistor 680	1	
VR1	EVN84A00B53	Variabel Resistor 5K	1	

Panasonic

MATSUSHITA ELECTRIC

Printed in Japan

ORDER NO. VRD-8206-099

Service Manual

Wireless Remote Control

Vol. 8

NV-A17-E

SPECIFICATIONS

Power:	DC. 3.2V ~ DC. 2.2V
Weight:	100g
Dimensions:	64(W) × 22(H) × 155(D) mm

Weight and dimensions shown are approximate.

Specifications are subject to change without notice.

Panasonic

Matsushita Electric Trading Co., Ltd.
P.O. Box 288, Central Osaka Japan

CONTENTS

SPECIFICATIONS ..... Cover
BATTERY REPLACEMENT CAUTION 8- 1
CONTROLS AND COMPONENTS 8- 2
INFRARED TRANSMITTER BLOCK DIAGRAM 8- 4
IR WIRELESS TRANSMITTER UNIT 8- 5
IR WIRELESS TRANSMITTER SCHEMATIC DIAGRAM 8- 6
EXPLODED VIEWS 8- 7
1. Transmitter Section 8- 7
2. Packing Parts Section 8- 7
MECHANICAL REPLACEMENT PARTS LIST 8- 8
ELECTRICAL REPLACEMENT PARTS LIST 8- 8

BATTERY REPLACEMENT CAUTION

- The Wireless Remote Control is powered by two batteries (size IEC standard R6, UM-3 "AA"). The life of the batteries is about a year although this will depend on the number of times the unit is used. Replace or inspect the batteries once a year.
- The batteries should be replaced with fresh units even if a year has not elapsed since the previous replacement when the unit does not function even when operated near the tuner or video recorder or when the unit's wireless remote transmitter operational indicator fails to light or does not light properly even when function buttons are pushed.
- Load the new batteries with their polarities (⊕ and ⊖) aligned properly.
- Do not heat, disassemble or shortcircuit the old batteries.
- If you do not intend to use the remote control for a long period of time, remove the batteries and store them in a cool, dry place.
- Remove spent batteries immediately and dispose of them.
- Do not mix old and new batteries (Also never mix alkaline batteries with manganese batteries.)
- In the unlikely event that the dry batteries leak, wipe away all the leakage inside the battery compartment and then replace with fresh batteries.

Load the battereies as follows:

① Remove the Battery Compartment lid.

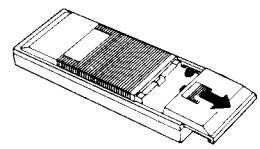

② Place two batteries in the Battery Compartment as indicated inside the Battery Compartment.

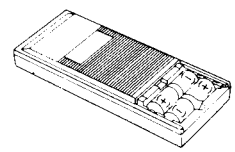

③ Replace the lid.

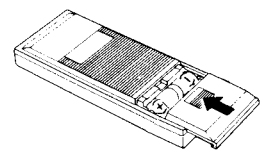

CONTROLS AND COMPONENTS

Set the remote control selector switch to ON before a remote control operation.

VTR Switch
When the video recorder's VTR switch is kept to ON, the power to the video recorder and tuner can be switched ON and OFF by this unit.

Remote Control Selector Switch
Set this switch to ON when using the unit.

Wireless Remote Transmitter Operational Indicator

Channel Up Button
This changes over the channel every time it is pushed.

Channel Selection Button
Push the button having a number corresponding to the desired channel to pick up stations.

- The remote control light-sensing angle is about 60°.
- The unit can be used within a range of about 7 meters from the front of the tuner.

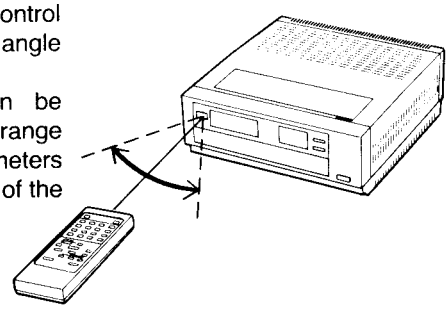

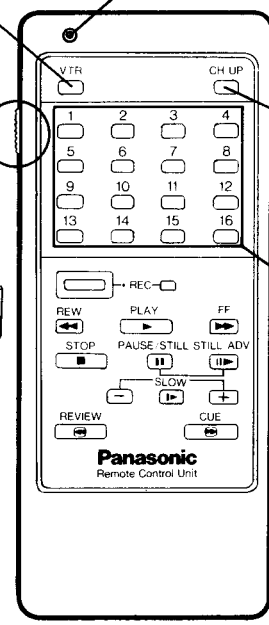

Record Button
Recording begins when both buttons are pressed at the same time.

Play Button
Press this button to playback recorded tapes.

Rewind Button
Press this button to rewind tapes.

Fast Forward Button
Press this button to move the tape forward rapidly.

Stop Button
Press this button to stop the tape.

Pause/Still Button
Press this button to temporarily stop the tape movement in either the recording or playback mode. During playback, a still-frame picture is produced when the pause is in use. Press again to release pause.

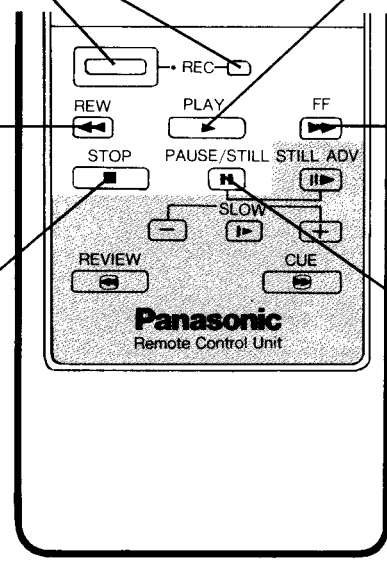

Slow-Motion Buttons
First press the SLOW Button during playback to view a slow-motion picture. Press the "+" or "−" button to increase or decrease the speed of the SLOW-MOTION picture.

−	I▶	+
1/25 ~ 1/5 ~ 1/3		

Review Button
During the play mode pressing this button will allow you to view the tape in reverse at about 5 times the recorded tape speed.

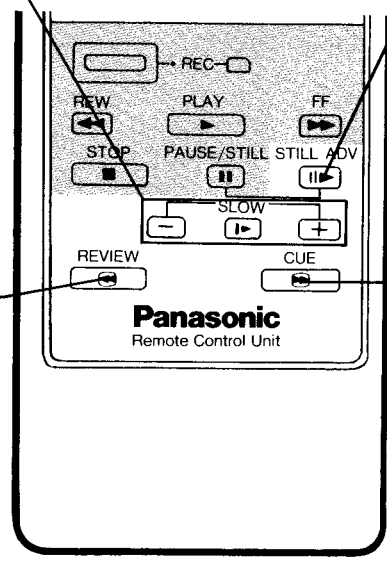

Frame Advance Button
During viewing of a still-frame picture, press this button to advance the picture one frame at a time or hold it down for a slow-motion picture.

Cue Button
During the play mode pressing this button will allow you to view the tape in the forward direction at about 5 times the recorded tape speed.

INFRARED TRANSMITTER BLOCK DIAGRAM

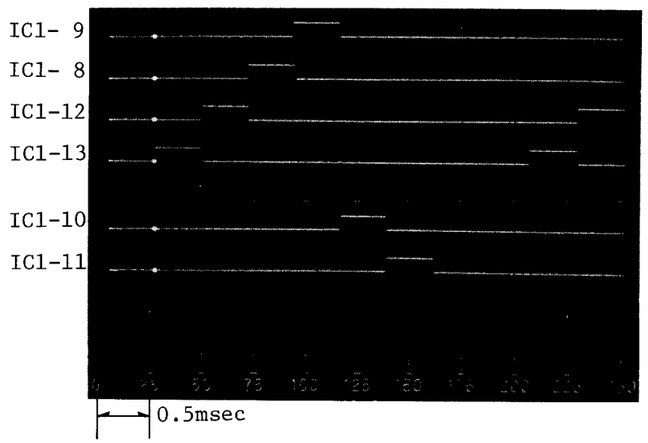

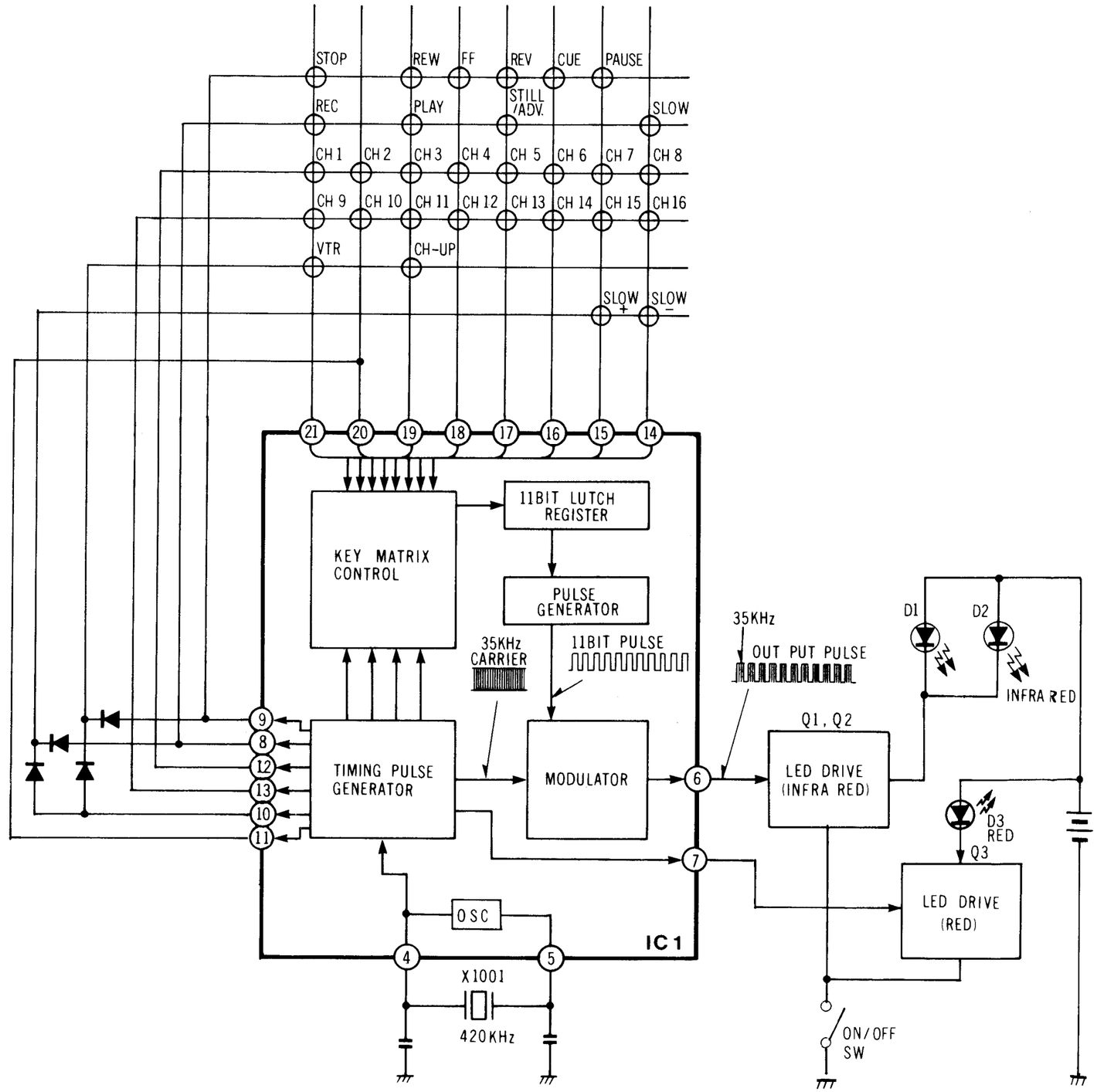

IR WIRELESS TRANSMITTER UNIT

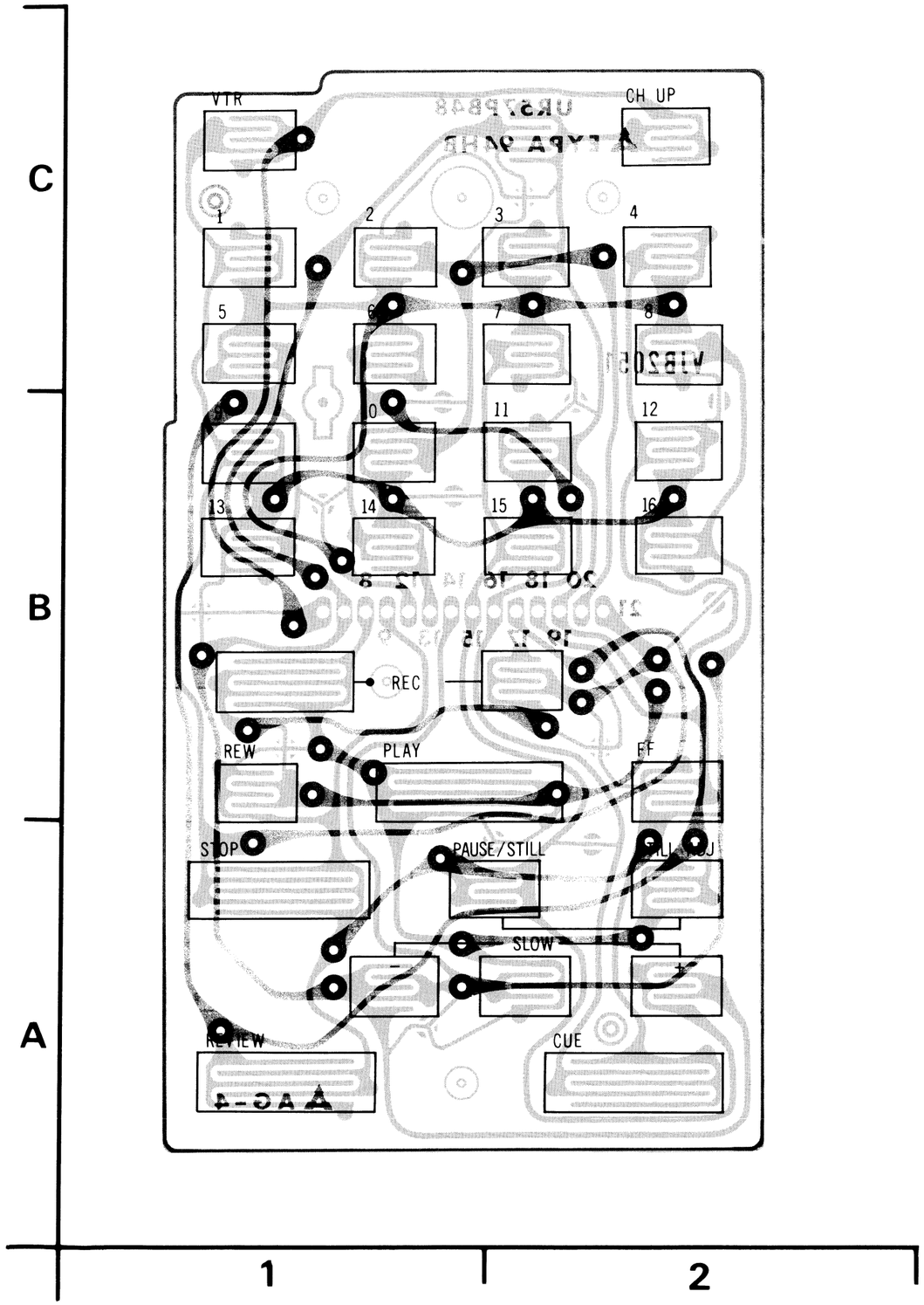

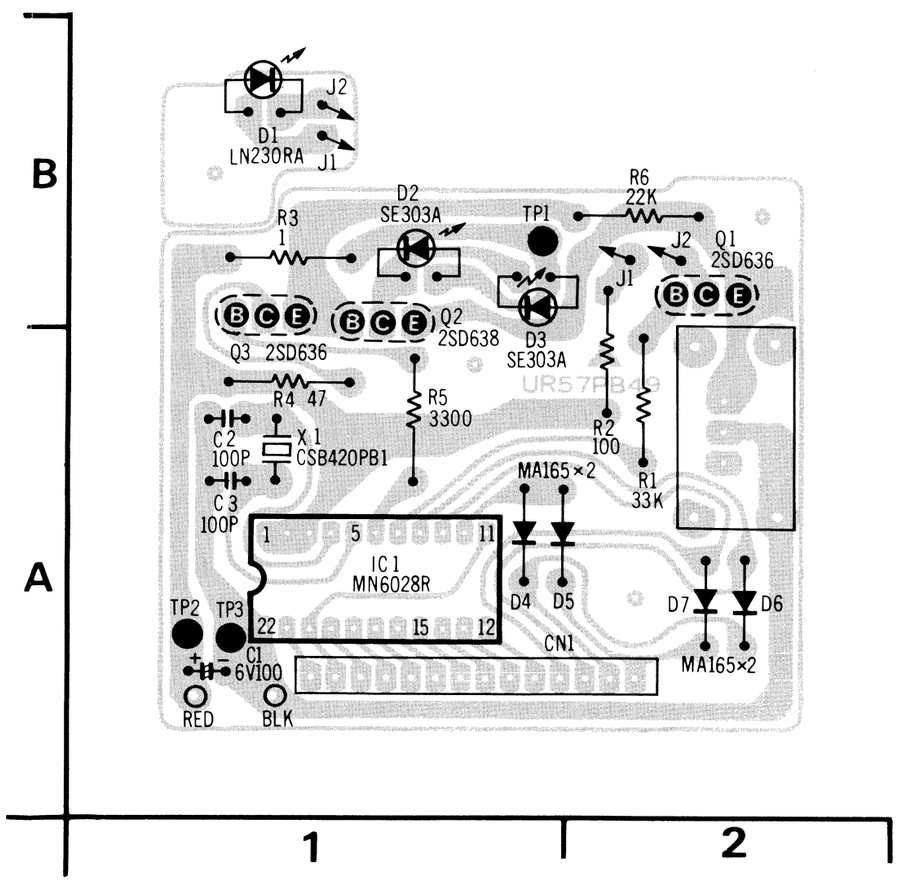

FUNCTION NO.	FUNCTION
0	STOP
2	REW
3	F.F
4	REV
5	CUE
6	PAUSE/STILL
8	REC
10	PLAY
12	
15	SLOW (×1/2)
16	CH1
17	CH2
18	CH3
19	CH4
20	CH5
21	CH6
22	CH7
23	CH8
24	CH9
25	CH10
26	CH11
27	CH12
28	CH13
29	CH14
30	CH15
31	CH16
32	VTR
34	CH UP
46	SLOW +
47	SLOW −

IR WIRELESS TRANSMITTER SCHEMATIC DIAGRAM

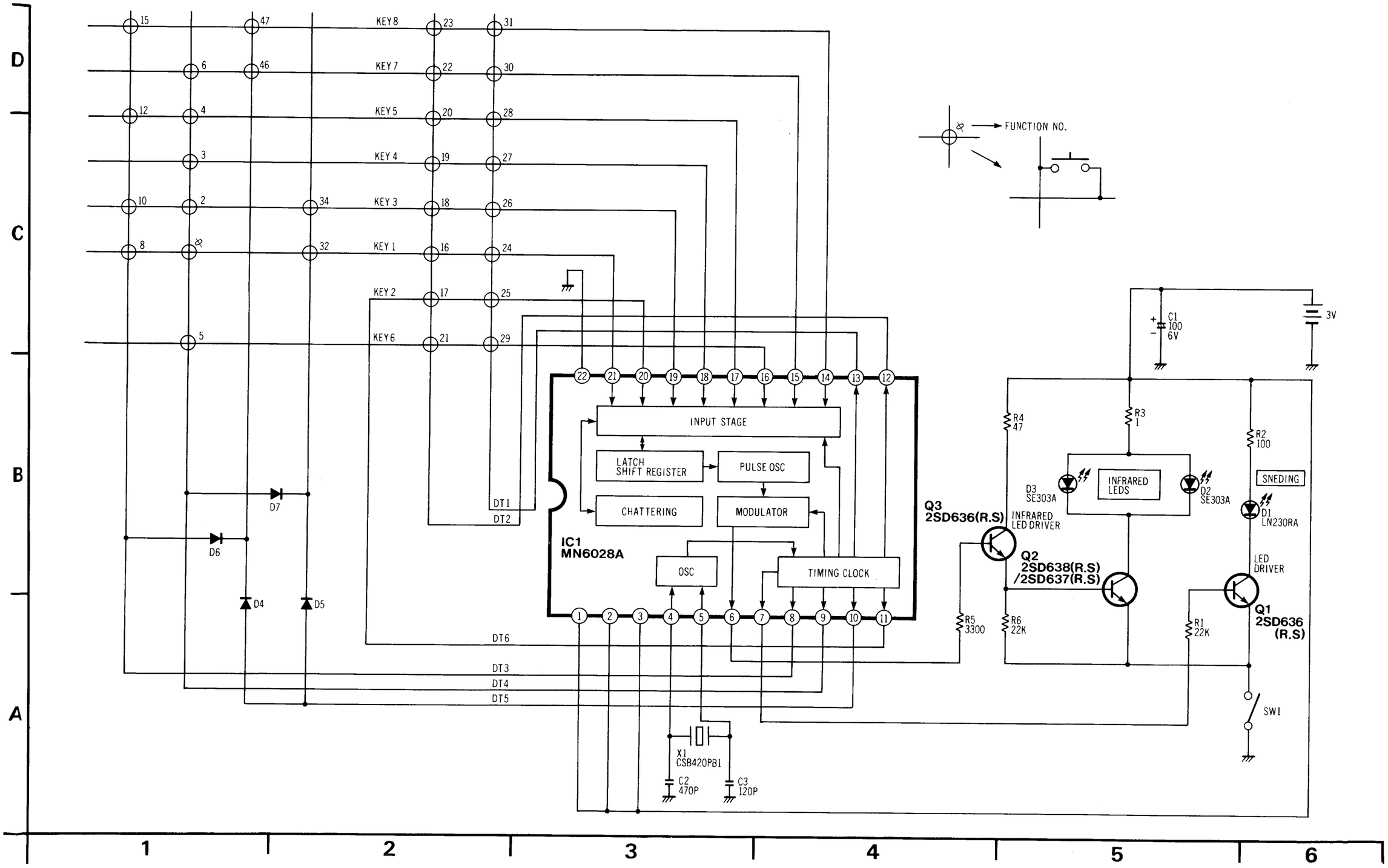

EXPLODED VIEWS ❶ *Transmitter Section*

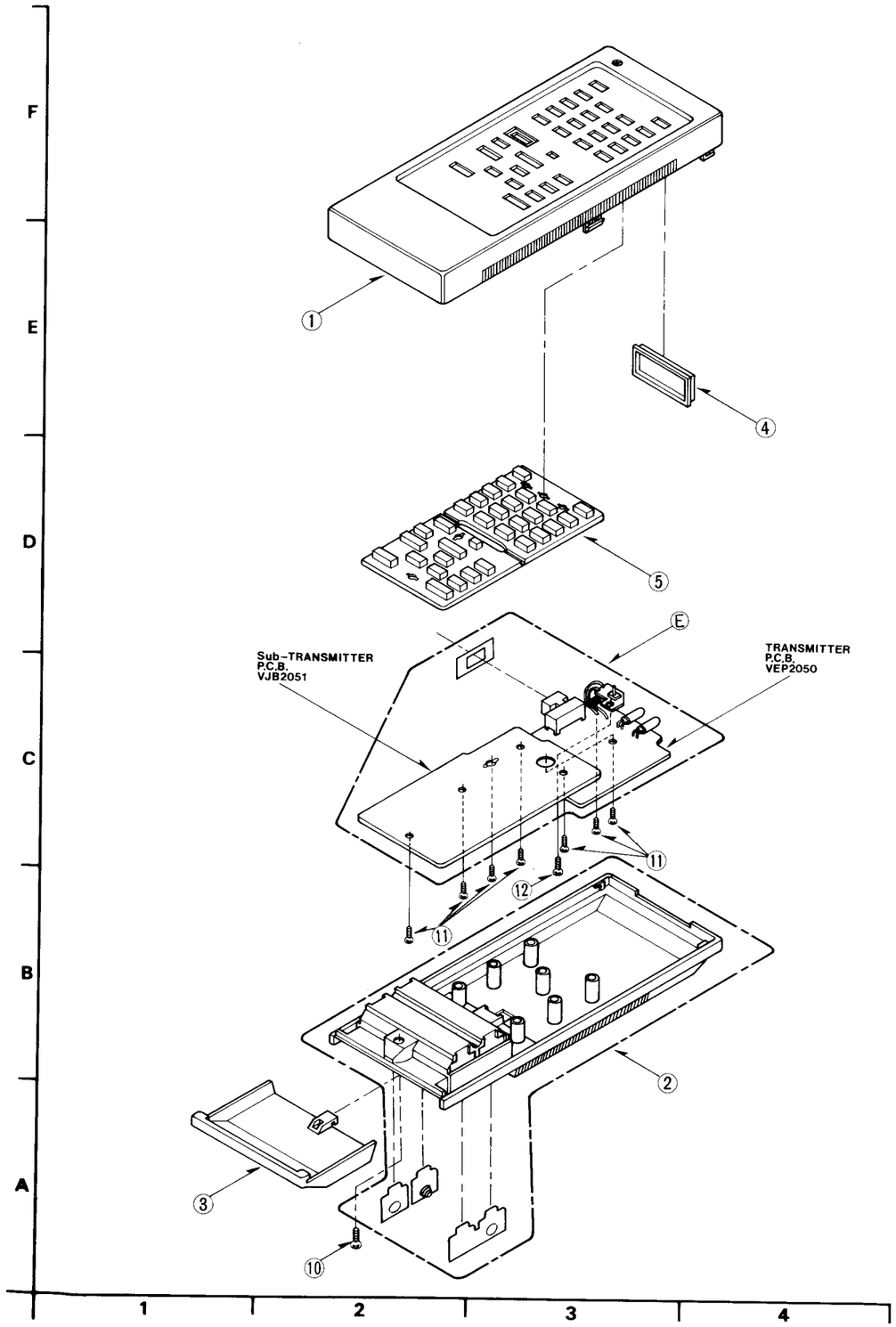

❷ *Packing Parts Section*

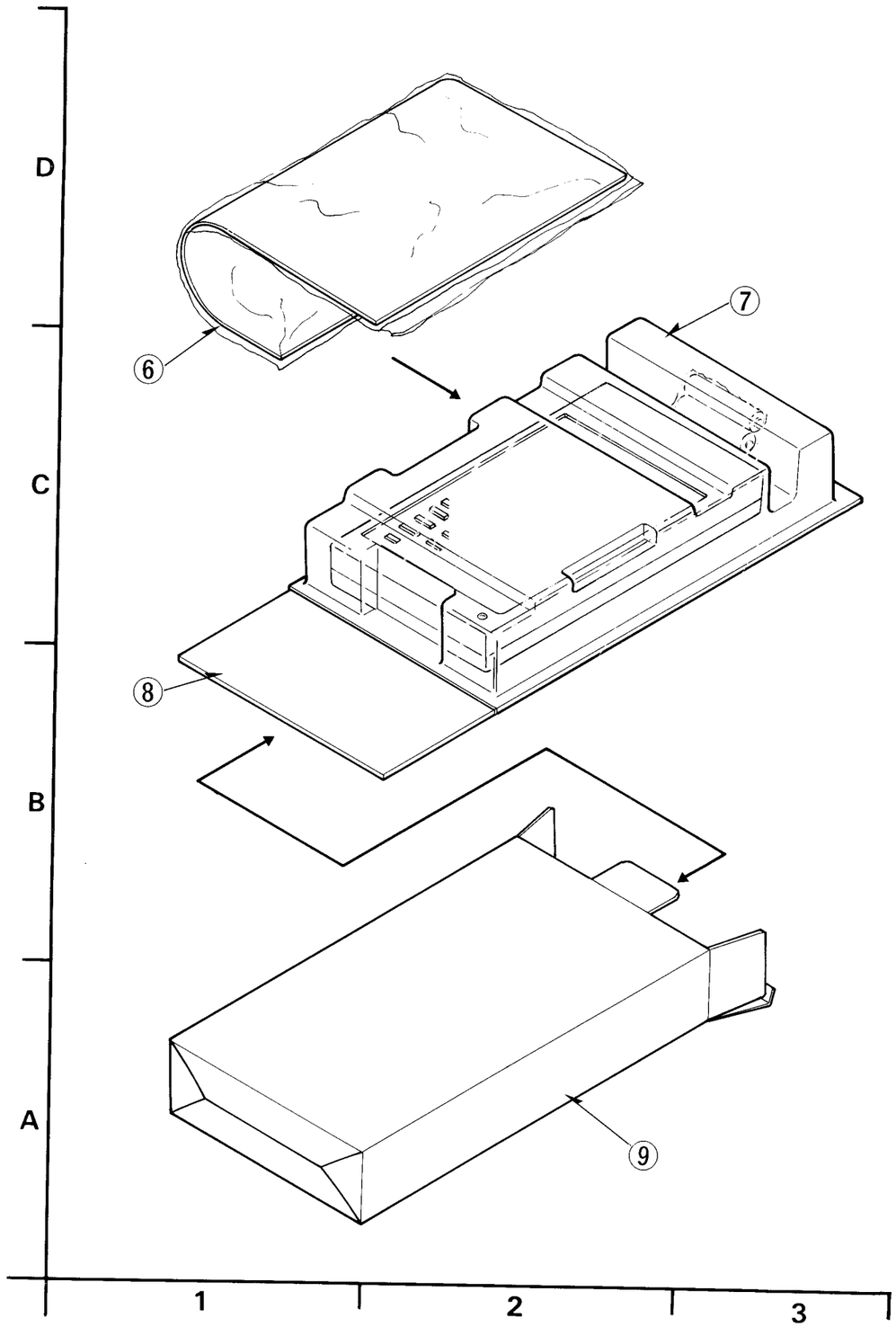

MECHANICAL REPLACEMENT PARTS LIST

Model No. NV-A17-E

Notes:
1. * Be sure to make your orders of replacement parts according to this list.

Ref. No.		Part No.	Part Name & Description	Pcs / Set	Remarks
1		VYK0430	Top Case Unit	1	
2		VYK0473	Bottom Case Unit	1	
3		VYK0474	Battery Cover Unit	1	
4		VKW0066	Filter Plate	1	
5		VGU0616	Rubber Plate	1	
6		VQF0875	Fan Bag	1	
7		VPN0798	Cushion	1	
8		VPN0799	PAD	1	
9		VPK0152	Packing Case	1	
10		XTN3+6G	Screw	1	
11		XTB2+4G	Screw	7	
12		XTN26+4G	Screw	1	
			Switch		
SW1		ESD14201		1	

ELECTRICAL REPLACEMENT PARTS LIST

Model No. NV-A17-E

Notes:
1. * Be sure to make your orders of replacement parts according to this list.
2. IMPORTANT SAFETY NOTICE
   Components identified by ⚠ have special characteristics important for safety.
   When replacing any of these components, use only the original ones.
3. Unless otherwise specified,
   All resistors are in OHMS (Ω), 1/8W ±5% carbon. K=1,000Ω, M=1,000KΩ.
   All capacitors are in MICROFARADS (μF), ±10% P=μμF.

Ref. No.		Part No.	Part Name & Description	Pcs / Set	Remarks
		VEP2050	Remote Control Transmitter		NV-A17E
			Integrated Circuit		
IC1		MN6028R		1	
			Transistors		
Q1		2SD636		1	(Q,R) or 2SD637(Q,R)
Q2		2SD638		1	(R,S) or 2SD639(R,S)
Q3		2SD636		1	(Q,R) or 2SD637(Q,R)
			Diodes		
D1		LN230RA	LED	1	
D2,3		SE303A	IR LED	2	or LN66(R,S)
D4-7		MA165		4	
			Resistors		
R1		ERD25TJ333	33K	1	
R2		ERD25TJ101	100	1	
R3		ERD25TJ1R0	1	1	
R4		ERD25TJ470	47	1	
R5		ERD25TJ332	3.3K	1	
R6		ERD25TJ223	22K	1	
			Capacitors		
C1		ECEA0JS101	Electrolytic 6.3V 100	1	
C2,3		ECKF1H101KB	Ceramic 50V 0.01	2	

Panasonic

MATSUSHITA ELECTRIC

Printed in Japan

Technical Information

VHS Video Cassette Recorder

Subject: Precautions During Services

To achieve higher integration in the installation of parts, this VTR uses the dual-face printed circuit boards: one based on the copper-through system (used for the System Control P.C. Board) and the other on the silver-through system (used for the Main P.C. Board). Various precautions needed to correctly perform servicing the silver-through P.C. Board are described below.

(1) Construction of the silver-through dual-face P.C. Board.

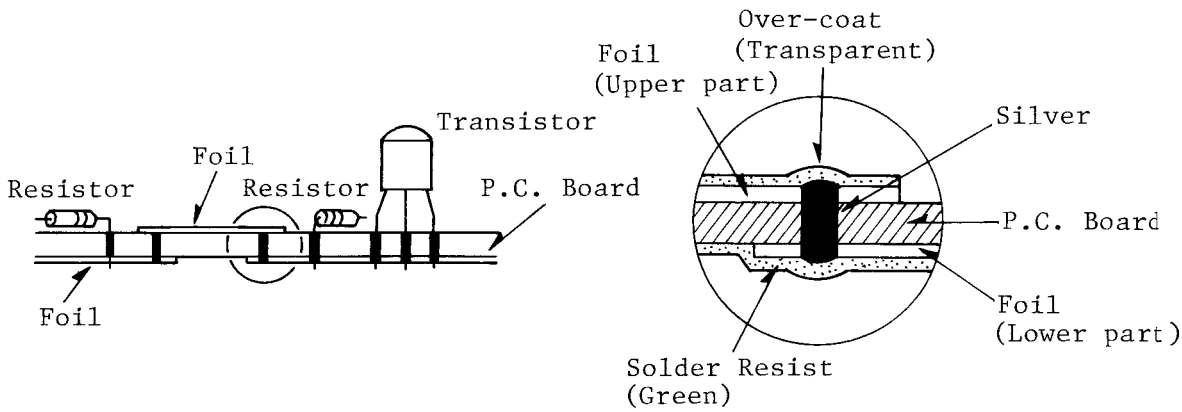

(2) Precautions in handling the silver-through part.

* Do not bring the solder iron into direct contact with the silver-through part or insert the lead-wire of any part in it, especially when replacing any of the parts.

* During inspection, be extremely careful not to cause an excessive current to flow through the silver-through part by short-circuiting any of the parts or the printed foil. The silver-through part allows a maximum of 300mA of the current to flow through.

* Handle the silver-through part with extreme care not to cause any damage and/or dropout of the over-coat (transparent) and solder-resist (green) materials coated on both surfaces.

* Be extremely careful not to cause any drop of water or any bit of grease to adhere on the silver-through part.

VHS

Matsushita Electric Trading Co., Ltd.
P.O. Box 288, Central Osaka Japan

(3) Repairing the silver-through part.

* Extrude silver from the silver-through part using any proper means such as the lead-wires of any part.
* Strip the coated materials such as the over-coat (transparent) and solder-resist (green) off from the silver-through part.
* Finally, carefully insert the lead-wires of the related parts and perform soldering as evenly as possible.

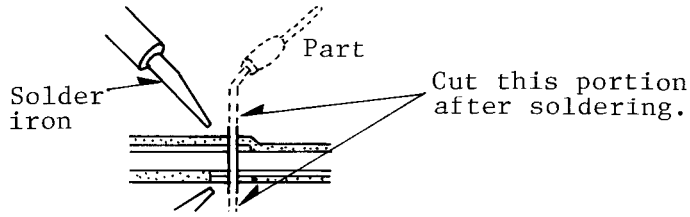

Method of replacing the FLAT Package-type Micro-computer.

The flat package-type microcomputer has the different form from any of the conventional micro-computers because of smaller size and lighter weight newly provided. The replacing method is described below, which will help you to effectively perform services when replacing it.

Procedures in replaceing the flat package-type micro-computer		Precautions
Removal		
Before removing the micro-computer from the P.C. board, absorb the solders deposited on the pins using a clean solder sucker shown in the drawing so that the residual solder will be minimized.	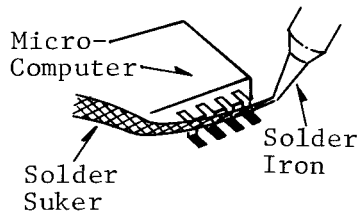	Use the solder iron (model VFK0248) specified for use with chip parts. Make sure to connect a 240V-AC transformer (model VFK0249) to the solder iron which is designed for use with 110V of the AC voltage.
Melt the solder on each pin (an electrode) with the top-end of the solder iron.	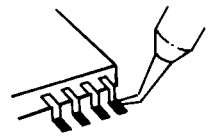	To prevent stripping of the printed foil, do not place the solder iron on any pin for a long while.
While the solder is still melted, pull up each pin using the top-end of the solder iron and remove the pin from the foil.	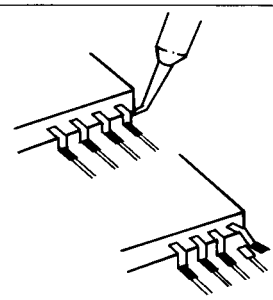	Pull up the pins as fast as possible while the solder is being melted. If the solder is solid, the printed foil may either drop off or be cut.
Repeat these operations in sequentially removing each pin from the foil.	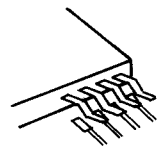	Since the counter micro-computer (IC6001) has a back-up part to properly keep the counter-value, pull off this part (P6021) before starting to replace the micro-computer.

Installation of a new micro-computer	
First, evenly apply the solder element to the foil surface where the pins must be soldered.	When installing either MN1455AVA or MN1455AVB. When installing μPD7502G090.
Properly determine the positions of the foil and pins by correctly aligning the polarity symbols, then secure the micro-computer in position.	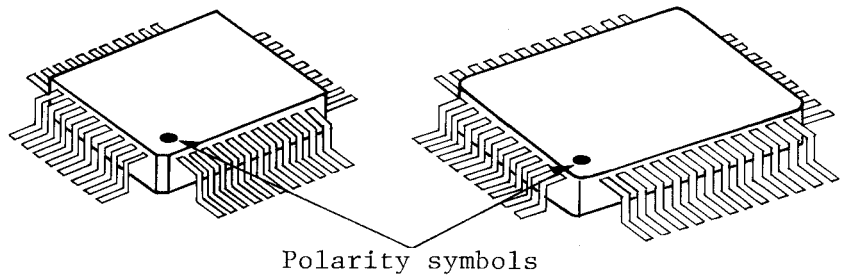 Polarity symbols
Solder all pins to properly connect to the foil.	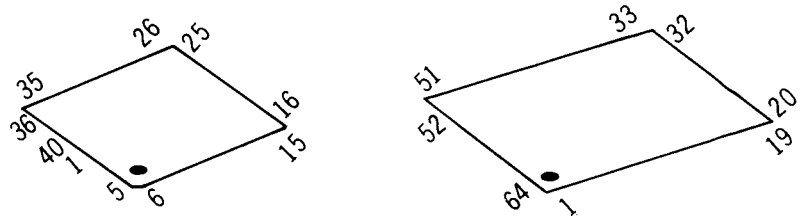 Correctly align the positions of these polarity symbols with the conor-cut portion as well as the polarity symbol on the printed circuit boards.

SPECIFICATIONS

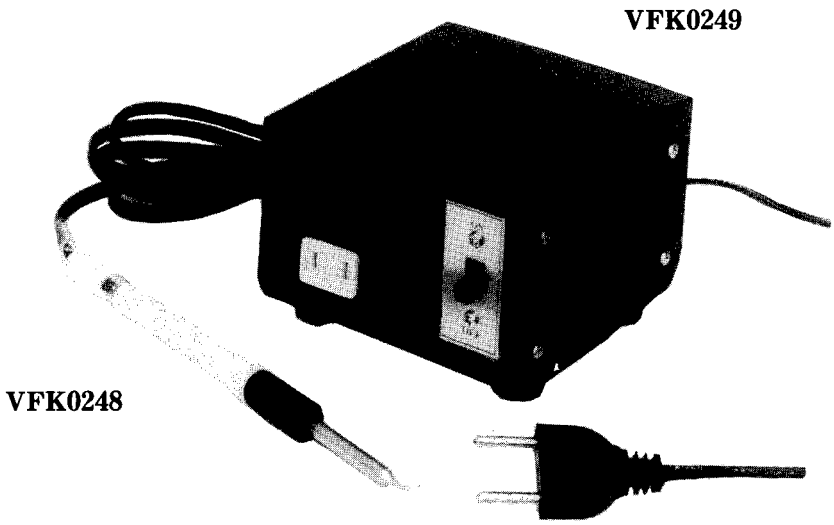

Solder Iron

Rate: 100V—15W

Insulation Resistance: 100MΩ

Max. Temp.: 400°C

Transformer

INPUT: 240V AC

OUTPUT: 100V AC 0.3A

Memo

Printed in Japan